IBERLAMP

SPECIFICATION

Product model	TD-023008	
Product Size (mm)	Ø107*300mm	
Product description	**Body material**	Die Casting Aluminum
	Optical cover material	/
	Surface finish	Pure polyester powder coating
	Safety	CLASS I
	Protection Grade	IP54
	Impact Strength(IK)	IK06
	UV-Resistant	F1
	Net Weight	0.87 Kg
	Rated Power	3 W
	LED Module Rated Power	0.125W*24
	Input Voltage	5 VDC
	Frequency Range	/
	Luminaire luminous efficiency(EFF)	56 lm/W
	Imax(cd)	69 cd
	Luminaire Efficiency(LOR%)	37
	Total Flux	170 lm
	Beam angle(At 50% of Imax)	180°
	Energy Efficiency Index(EEI)	0.16
	Colour rendering index(Ra)	≥80
	Colour Temperature(CCT)	3000K
	SDCM	≤5
	Surge transient protection	/
	Working temperature	-30℃ ~ +45℃
LED Chip	**LED Brand**	OSRAM
	LED Model No.	2835
	LED Nominal Flux(lm)	18.75 lm
	LED Quantity	24
	Life Span	50000 Hrs
Driver	**STOCK NUMBER**	L-QD-PA67
	Driver Brand	TUV approval
	Driver Output	2.8-4.2VDC
	Driver Effeciency	≥70%
	Power Factor	1.0
	THD	/
	Ripple current	/
Certification	**CE、CCC、CB、SAA、BIS**	





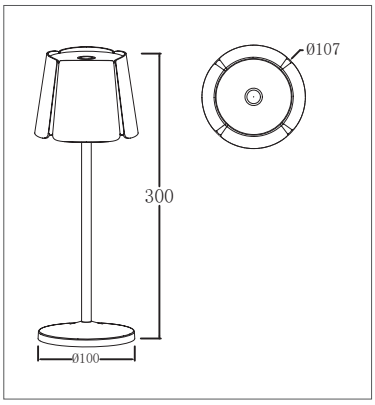

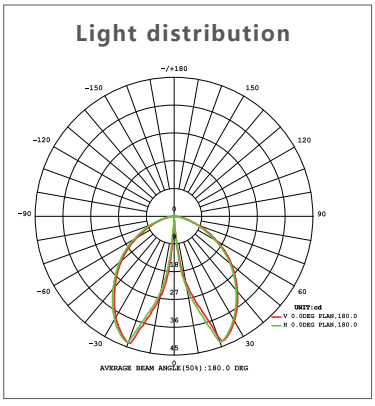

C/Artesans,4-Pol. Ind. Bovalar - 46970 Alaquas - Valencia - Spain
+34 644 775 554 / +34 667 788 071 / +34 667 788 072
info@iberlamp.com www.iberlamp.com CIF B-02797751