1.A new lens gasket

2.A lamp OR LED lamp disc

Installation Diagram

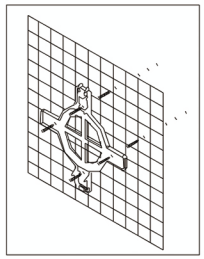

Plastic bracket diagram

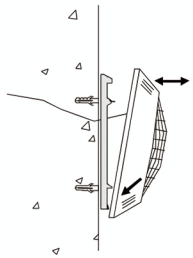

Plastic installation diagram

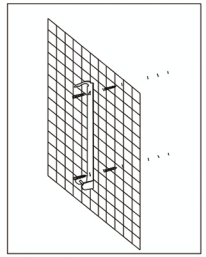

Plastic bracket diagram

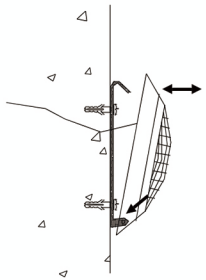

Plastic installation diagram

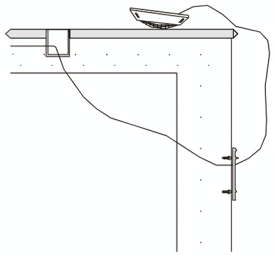

Maintenance state

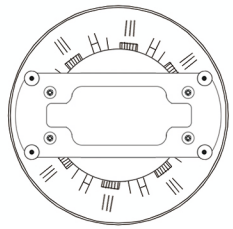

Back of light installation diagram

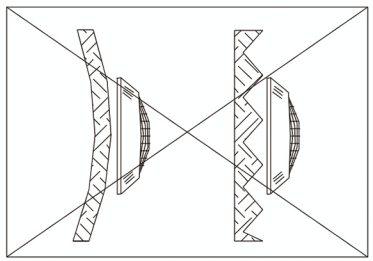

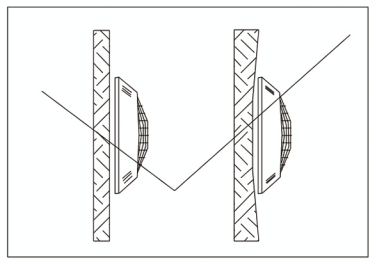

Installation conditions

Underwater Light Operating Procedures

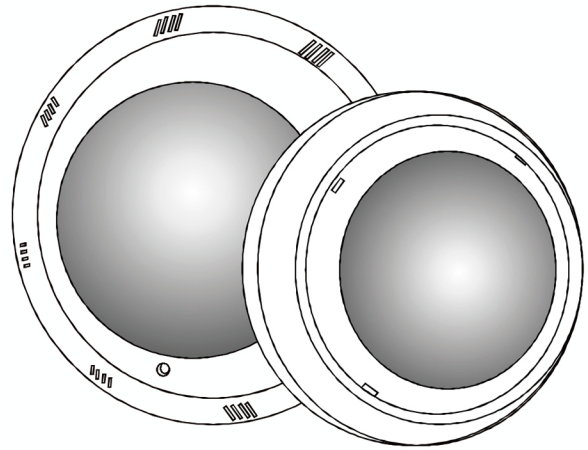

Read and save these instructions!

----------DANGER----------

RISK OF ELECTRICAL SHOCK OR ELECTROCUTION

This underwater light must be installed by a licensed or certified electrician in accordance with the National Electrical Code and all applicable local codes and ordinances .Improper installation will create an electrical hazard which could result in death or serious injury to pool users ,installer ,or others due to electrical shock ,and may also cause damage to property Read and follow the specific instructions below .

WARNING:

Before installing this underwater light ,read and follow all warning notices and instructions accompanying this light .Failure to follow safety warnings and instructions can result in severe injury ,death or property damage .

IMPORTANT NOTICE

Attention installer

This manual contains important information about the installation ,operation and safe use of this product .This information should be given to the owner/operator of this equipment .

----------**-INSTALLATION**----------

A.Preparatory steps which must be completed by the electrician before light is installed ,see Figure1.

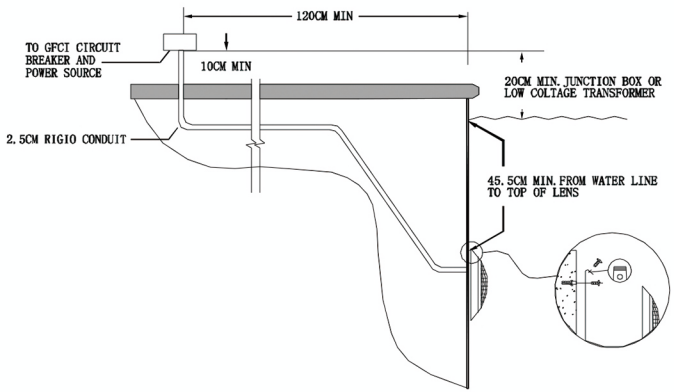

1.Ensure that the electrical system of the pool conforms with the requirements of the current all local codes and ordinances . A licensed or certified electrician must install the electrical system to meet or exceed those requirements before the Underwater Light is installed .

a.The junction box ,or the low voltage transformer for 12 volt models ,is located at least 120CM from the edge of the pool ,see Figure 1.

b.The light fixture and all metal items within five(5) feet of the pool must be properly electrically bonded.

c.The mounting bracket must be properly installed so that the top edge of the Underwater Light's lens is at least 45.5CM below the surface of the water in the pool,see Figure 1.

d.The lighting circuit must have a Ground Fault Circuit Interrupter(GFCI),and must have an appropriately rated circuit breaker.

NOTE: The pool or spa electrical system can be verified with a pool and Spa Electrical Qualification Test kit .The electrical system inspection using this kit must be performed by trained and certified personal.

2.Consult the local building department to be certain that the pool's electrical system meets all applicable requirements.Perform

3.Feed cord through conduit to Junction Box ,leaving at least 120CM of cord at the light fixture to around the light ,see Figure 1 . This 120CM of cord around the light allows the light to be serviced after the pool is filled with water .

4.Cut the cord at the Junction Box ,leaving at least 15CM of cord to make conncetions.

5.Strip 15CM of the outer cord jacket to expose the three insulated wires .Be careful not to damage the insulation on the two/three(2/3) inner wires .

6.Connect all two/three(2/3) wires to the corresponding circuit wires in the Junction Box ,and secure the Junction Box cover in place

7.Rotating locking System ensures light is secured to bracket

8.Par56 lamp is a light source ,shell material including : full glass and PC, or PC and stainless steel bottom. Using light source should be Coordinated with other embedded shell.it wii be Embedded pool lighting after equipped with embedded shell, and also Coordinating with other shell for other purposes.

Replacement bulb or LED lamp

Always disconnect power to the pool light at the circuit breaker before servicing the light .Failure to do so could result in death or serious injury to installers,servicemen ,pool users,or others due to electrical shock .

A .Turn off main electrical switch or circuit breaker ,as well as the switch which operates the underwater light itself.

B .You will need the following items :