Instruction Manual for LED Underwater Light

IMPORTANT: This manual includes essential information on the safety measures to be implemented for installation and start-up. Therefore, the installer, as well as the user, must read these instructions before beginning installation and start-up.

1.White only, Warm White only, or other single color only lights (12AC/DC ,2 wires out)

Note: To prevent risk of fire which could result in property damage and to ensure optimum performance , do not exceed the load factor specified in the instruction provided by the transformer manufacture .

These lights are not dimmable, and are not compatible with dimmer switches or dimmer relays . They can be wired into a switch or manually turn ON/OFF the lights.

2. RGB Switch control mode. (12VAC ,2 wires out)

See the below of **16 color modes sequence .**

1.Evening sea: slow animation blue/red 2.Evening rivers: slow animation green/red

3.Riviera: slow animation blue/green 4.White: neutral white

5.Rainbow: slow animation in green/blue/green+blue/red+blue/green+blue/RGB/red

6.River of colors:slow animation in red/green/blue/green+blue/red+blue/green+blue/RGB,followed by program 8

7.Disco: fast animation ,(fast-slow) followed by program5

8.Four seasons: slow animation in red+green/green/green+blue/blue/violet/red

9.Party: fast animation,(fast-slow) followed by program 6

10. White: sun white 11. Red: fixed color red 12. Green: fixed color green

13. Blue: fixed color blue 14. Green-blue: fixed color green/blue(cyan)

15. Red-green: fixed color red/green(yellow) 16. Blue-red: fixed color blue-red(purple)

To Operate these RGB lights:

- The 16 pre-programmed effects and combinations may be selected using the on/off switch of your pool lights. Just switch off and switch on within 3 second. **(Switch control)**
- If the light is powered off for more than 20 seconds, it will keep the latest program when it is turned on again.**(Memory Function)**
- To achieve synchronization, confirm all lamps are installed correctly on the **same switch**, after they are powered off for more than 20 seconds, switch on and switch off continuously 3 times, and then finally turn them on again. They will all go to program 1. Now you can select a program for them by switch off and on within 3 seconds .**(Re-set Function)**

3.RGBW / RGB External control mode (12V/24VDC ,5 / 4 wires out)

IMPORTANT: This section only applies to the RGBW/RGB lights with 5/4 wires out ,12VDC or 24VDC. the operators can choose to install controllers to build a fine control system . The specification of the controller and the power supply , especially the input voltage ,must be well known by the users and installers before installation .Failure to do so may cause the injury to person and damage to the lights system .

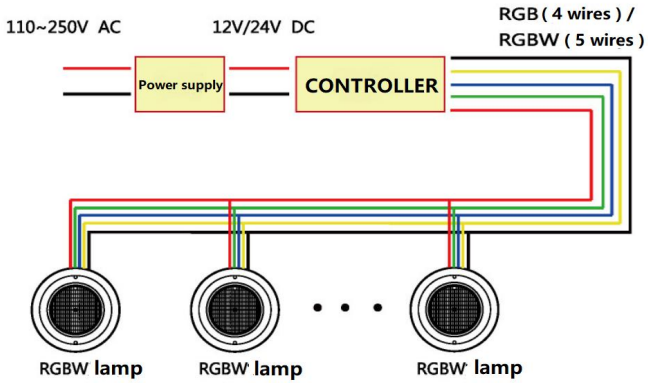

Safety Warnings

●**Don't use electronic transformers which may damage the light. You should use industrial frequency transformer , such as toroidal transformer and square transformer .**

●The persons who are in charge of installation should have the required qualifications for this type of work. ● Avoid making contact with the electric voltage.

●Comply with the current standards regarding accident prevention. ●IEC 364-7-702 standards must be observed: WIRING IN BUILDINGS, SPECIAL WIRING, SWIMMING POOLS.

●Replacement must be performed with the lamp disconnected from the electric power syste

● Do not handle any electrical components with wet feet.

Warranty

The manufacturer warrants these LED underwater lights against defects in materials and workmanship for a period of two years from the date of purchase. This warranty does not cover the fixture becoming damaged due to misuse, accidental damaged, improper handling and/or installation and specifically excludes liability for direct, incidental damages.