Assembly diagram

800W

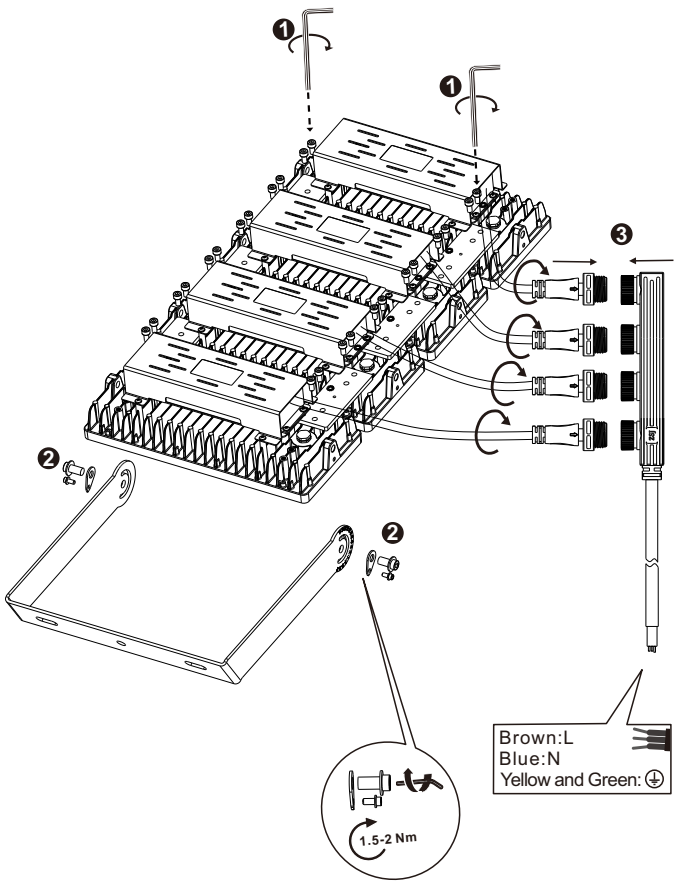

Module 4PCS	
Bracket B 1PCS	connecting part A 6PCS
Screw M10*30 2PCS	Screw M6*22 24PCS
Screw M5*25 2PCS	Gaskets M6 6PCS
Gasket 2PCS	M15-F-1T4 1PCS

Foreword

Thanks for choosing our LED Flood light. We strongly recommend you to read this manual carefully before installation and usage. Make sure you have completely understood the assembly instructions so as to ensure normal working of LED Flood light.

Safety Warnings

In order to ensure a perfect quality of the product and a safe usage, please kindly follow the instructions:

1. Before opening the package, please check if there's damage or defect during transportation, if damage occurs, please don't use it and inform your supplier immediately.
2. Should the product be found damaged in any way, please keep it in package and contact your supplier in time.
3. Please do not attempt to use a damaged product.
4. The product should be installed, dismantled and maintained by a qualified electrician; Suppliers don't take charge of any problems or damages that occur due to mishandling such as an operation not permitted in this manual.
5. Choose an install place where can withstand 10 times the weight of the product to ensure a solid installation.
6. Wipe the veil with soft cloth dipped a little neutral detergent, be sure not to use any sandpaper, polishing powder or alcohol, gasoline and so on liquor.
7. A High Pressure Air Blower is recommended to clean the heat sink of this LED Flood light.
8. To avoid the risk of fire, explosion, or electric shock, this product should be installed, inspected, and maintained by a qualified electrician only, in accordance with all applicable electrical codes.
9. Be certain electrical power is OFF before and during installation and maintenance.
10. The external flexible cable or cord of this luminaire cannot be replaced; if the cord is damaged, the luminaire shall be destroyed.
11. The light source of this luminaire is not replaceable;when the light source reaches its end of life the whole luminaire shall be replaced.
12. Terminal block not included. Installation may require advice from a qualified person.
13. IP66 can be used indoors and outdoors.
14. Shall be installed out of arms reach.
15. Caution, risk of electric shock.

This manual applies to this model product only, for more information, please contact our staff.

V1.0.2023.07.14

USER MANUAL

STADIUM LIFUD



IK08 IP66

outdoor indoor RoHS

Components and parts	1
Product Parameter	1
Product Dimension(mm)	1
Assembly diagram	2-4
Foreword	5
Safety Warnings	5

Components and parts

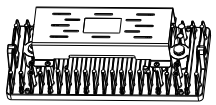

Module



Connecting part A+Screw



Bracket A+Screw
(200W/400W)

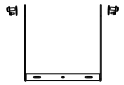

Bracket B+Screw
(600W/800W)



M15-FM



M15-F-1T2



M15-F-1T3



M15-F-1T4

Product Parameter

1.Beam angle: 30deg/60deg/90deg/polarized 50deg
2.Operating temperature: -30°C~50°C
3.The power input voltage should be based on the product label.

	Power	Voltage	PF	CRI	@4000K @5000K @5700K	Module weight	Power Module weight	Product weight
150 lm/w	200W	100-277Vac 220-240Vac	0.90	70	30000 lm	1.55±0.5kg	0.57±0.1kg	2.65±0.5kg
	400W				60000 lm	3.40±0.5kg	1.14±0.1kg	5.05±0.5kg
	600W				90000 lm	5.30±0.5kg	1.71±0.1kg	8.25±0.5kg
	800W				120000 lm	7.20±0.5kg	2.28±0.1kg	10.75±0.5kg

Module Dimension(mm)

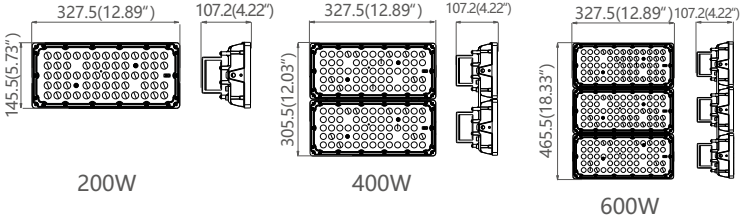

Assembly diagram

200W

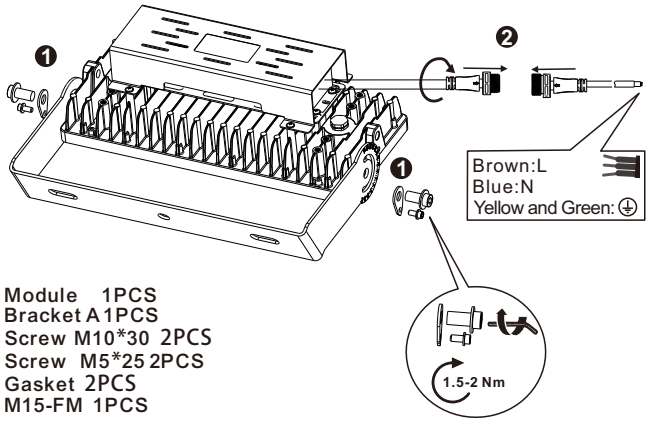

Module 1PCS
Bracket A 1PCS
Screw M10*30 2PCS
Screw M5*25 2PCS
Gasket 2PCS
M15-FM 1PCS

400W

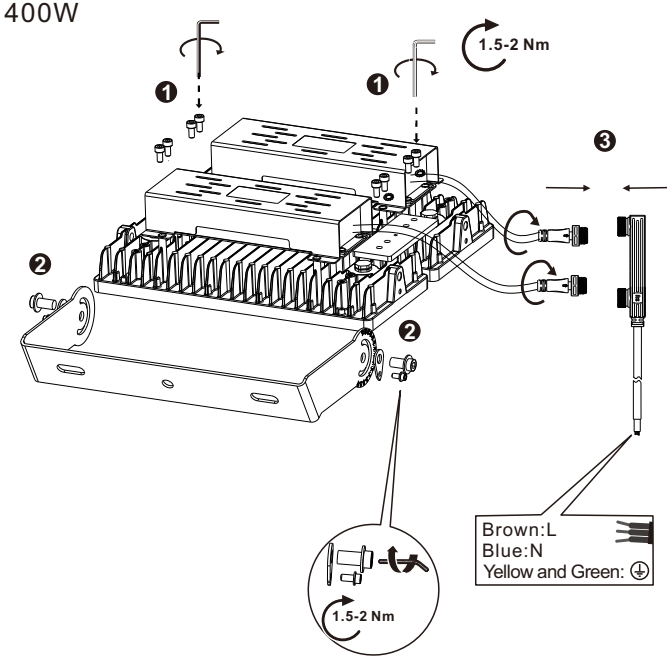

Module 1PCS
Bracket A 1PCS
Screw M10*30 2PCS
Screw M5*25 2PCS
Gasket 2PCS

connecting part A 2PCS
Screw M6*22 8PCS
Gaskets M6 2PCS
M15-F-1T2 1PCS

Assembly diagram

600W

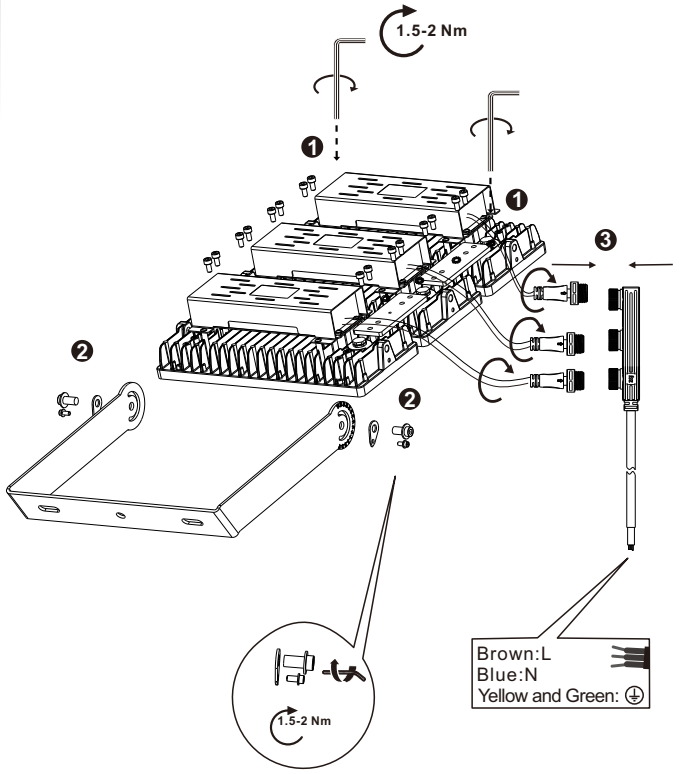

Module 1PCS
Bracket B 1PCS
Screw M10*30 2PCS
Screw M5*25 2PCS
Gasket 2PCS

connecting part A 4PCS
Screw M6*22 16PCS
Gaskets M6 4PCS
M15-F-1T3 1PCS