User Manual STADIUM

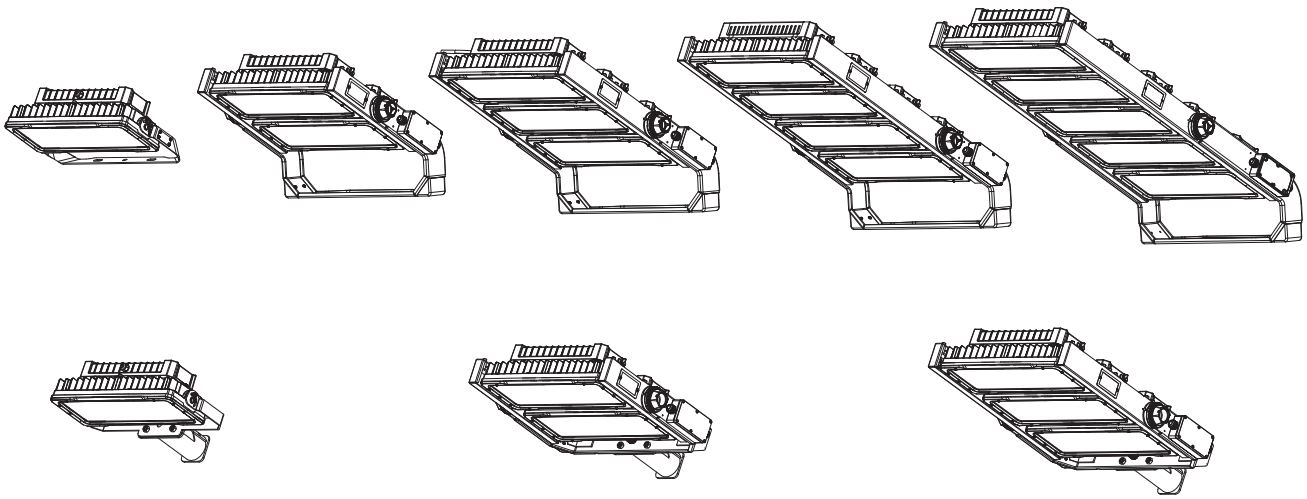

		IEC EN60598	UL 1598 CSA C22.2 No. 250.0				10m<	185-1500W	100-277 Vac 277-480 Vac 50/60Hz	IP	IK
										66	08

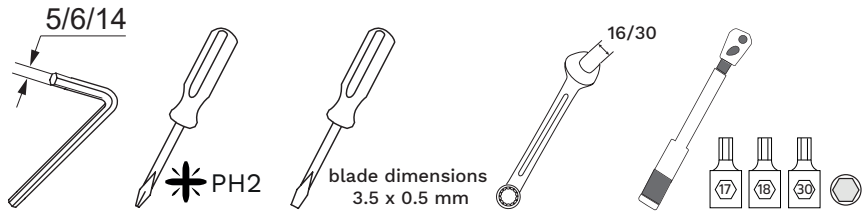



A - PRODUCT OVERVIEW

1 Product size

Single module with U brackt

Without visor

=6.5kg/14.33lbs

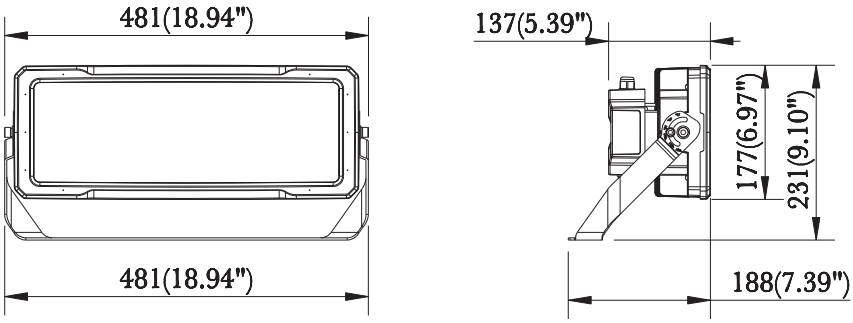

With visor

=6.9kg/15.21lbs

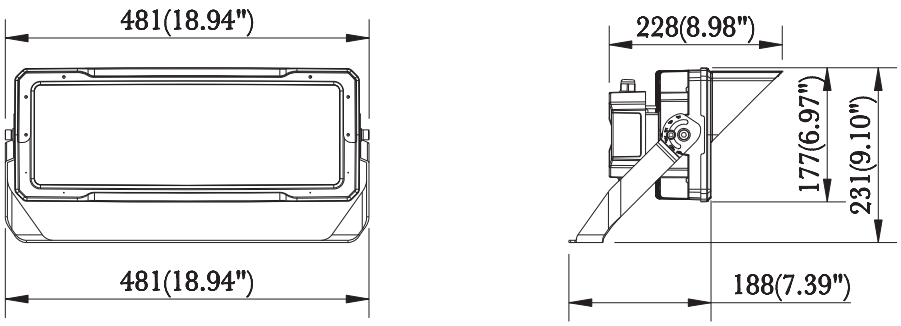

Single module with SF brackt

Without visor

=8.5kg/18.74lbs

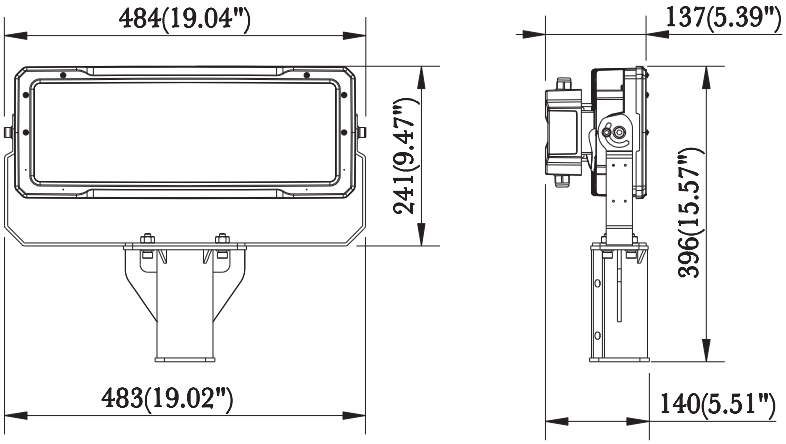

With visor

=8.9kg/19.62lbs

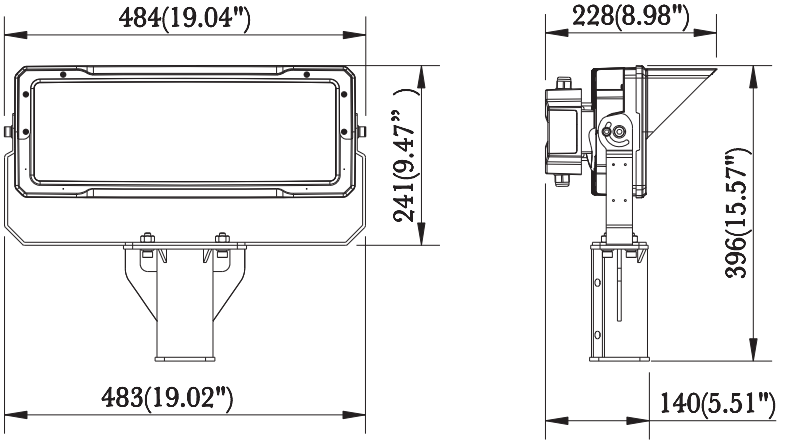

Two module with U brackt

Without visor

=18.8kg/41.45lbs

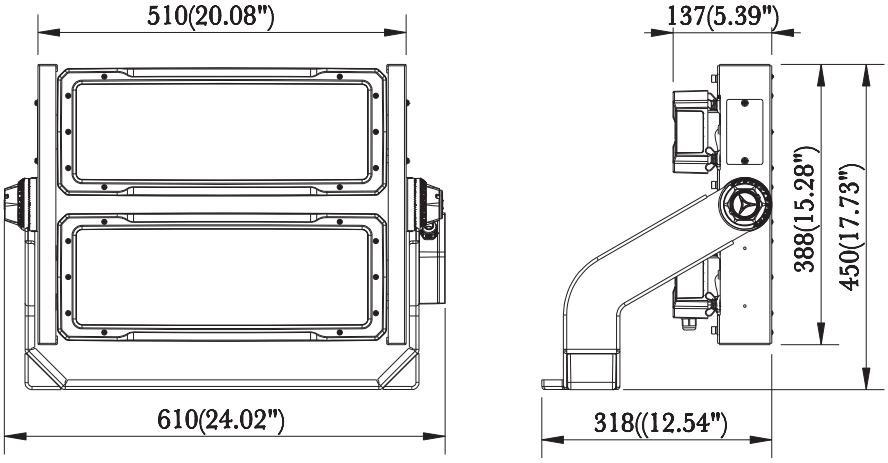

With visor

=19.6kg/43.21lbs

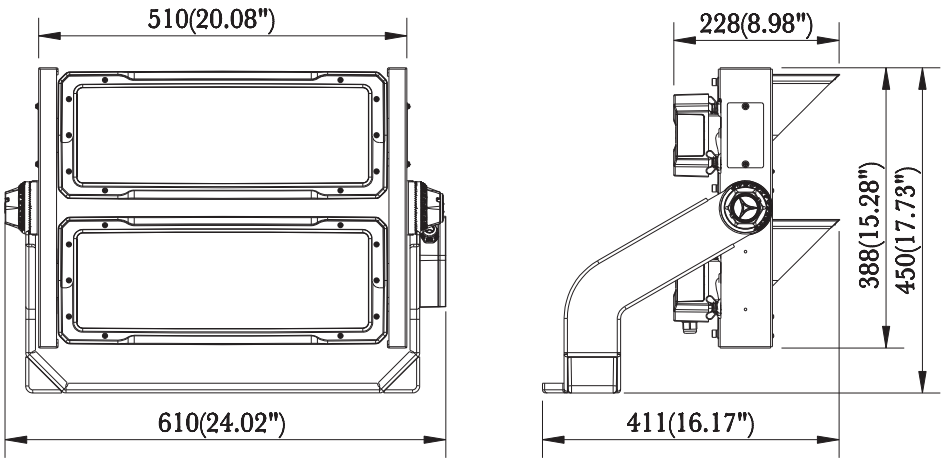

Two module with SF brackt

Without visor

=20.8kg/45.86lbs

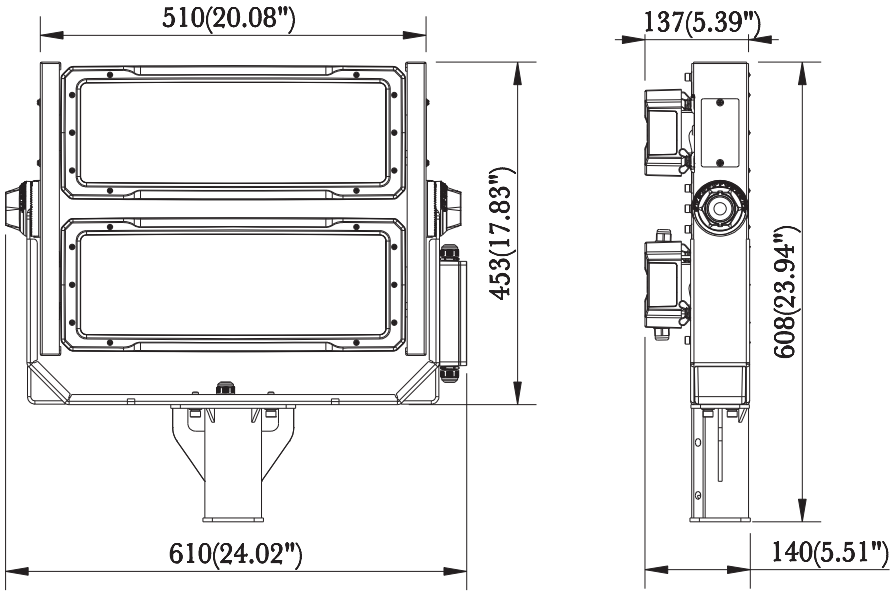

With visor

=21.6kg/47.62lbs

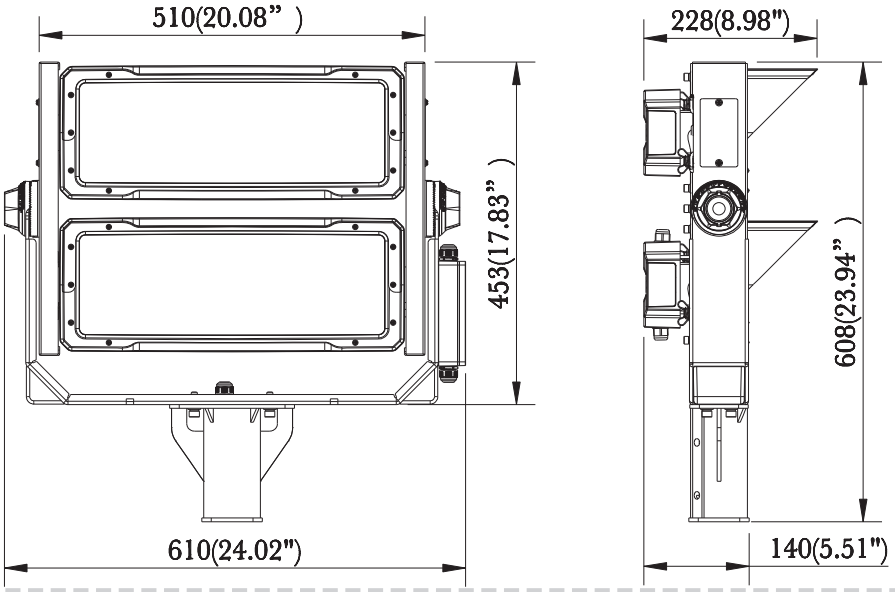

Three module with U brackt

Without visor

=25.5kg/56.22lbs

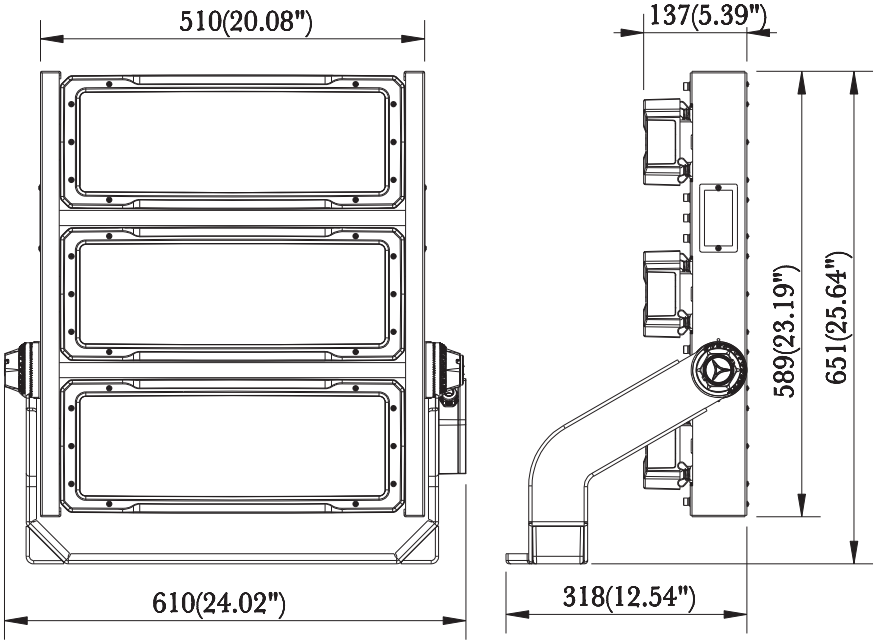

With visor

=26.7kg/58.86lbs

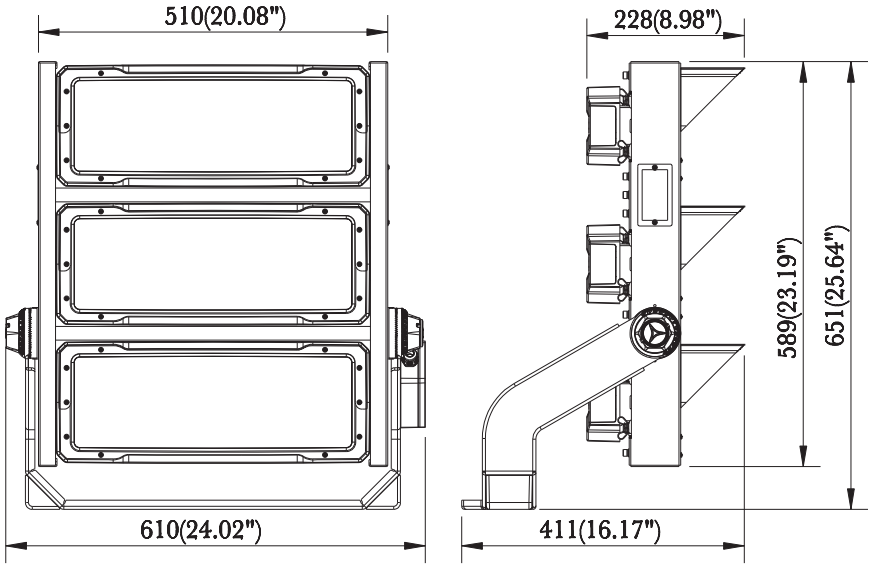

Three module with SF brackt

Without visor

=27.5kg/60.63lbs

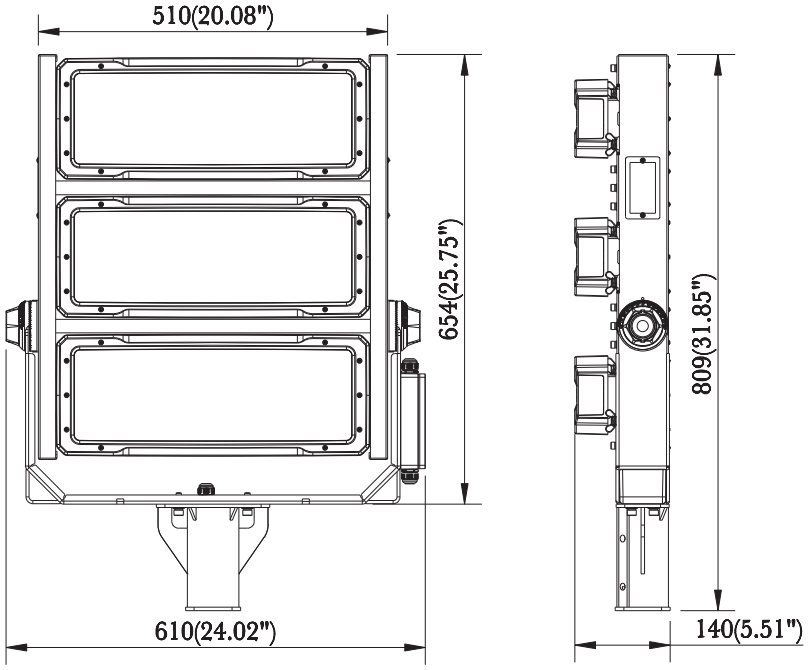

With visor

=28.7kg/63.27lbs

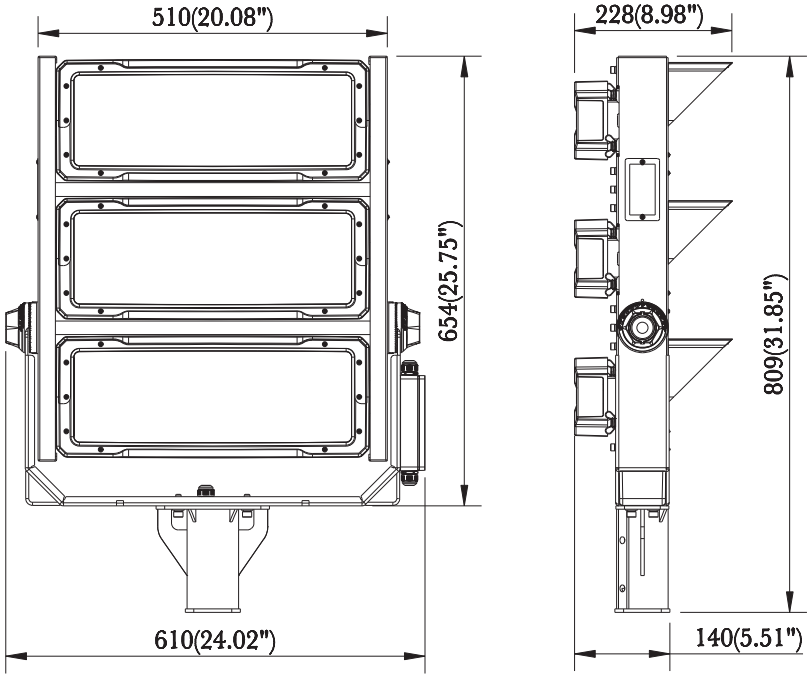

Four module with U brackt

Without visor

=32kg/70.55lbs

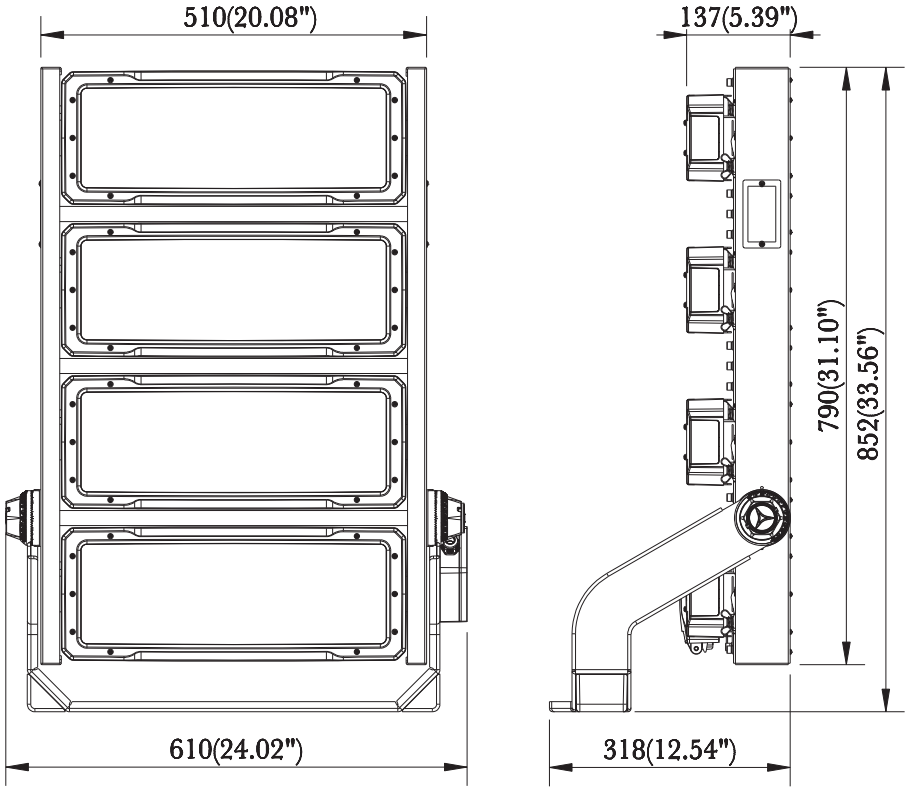

With visor

=33.6kg/74.08lbs

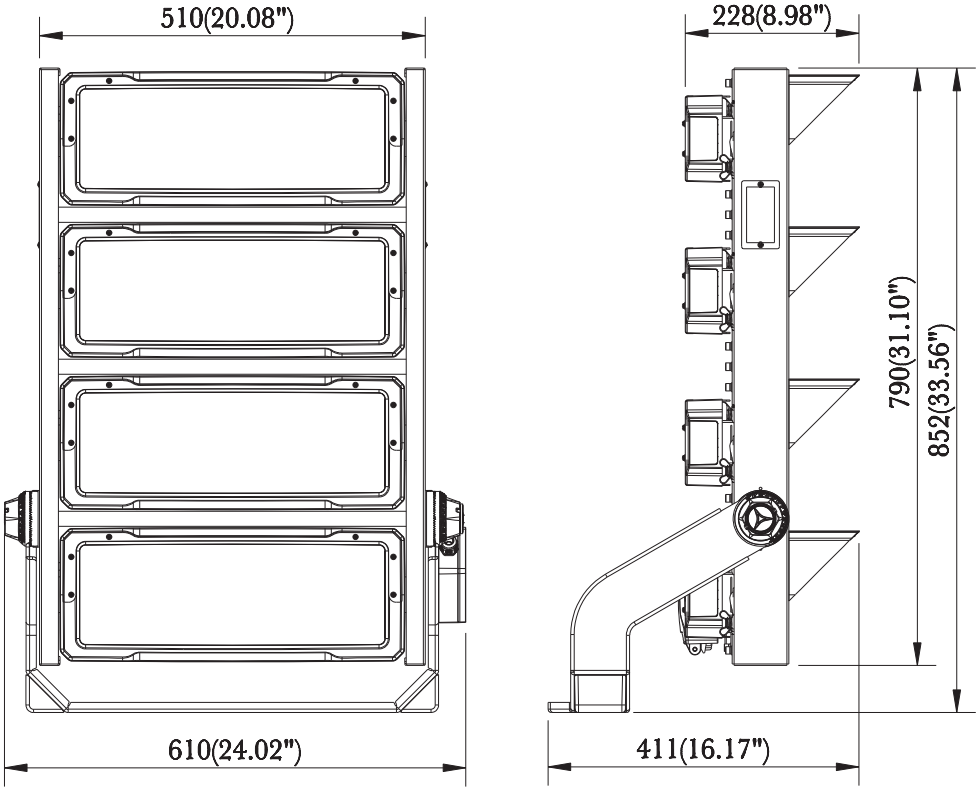

Five module with U brackt

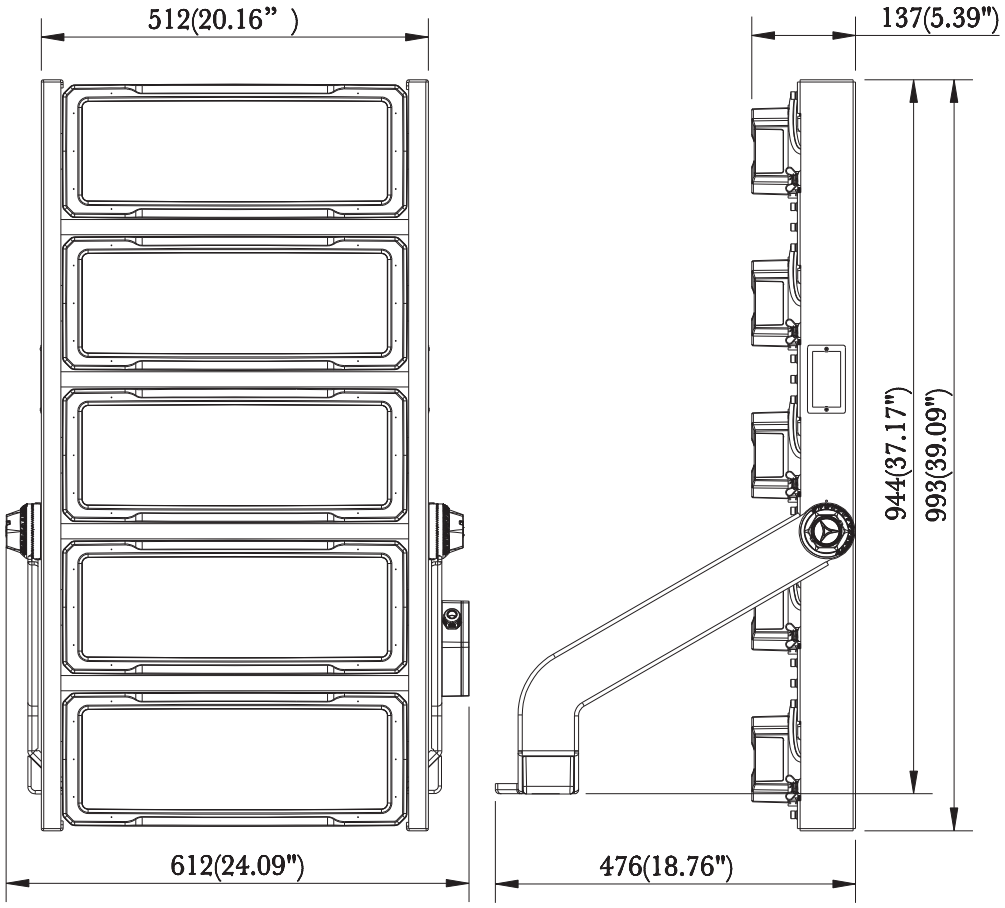

Without visor

=40kg/88.18lbs

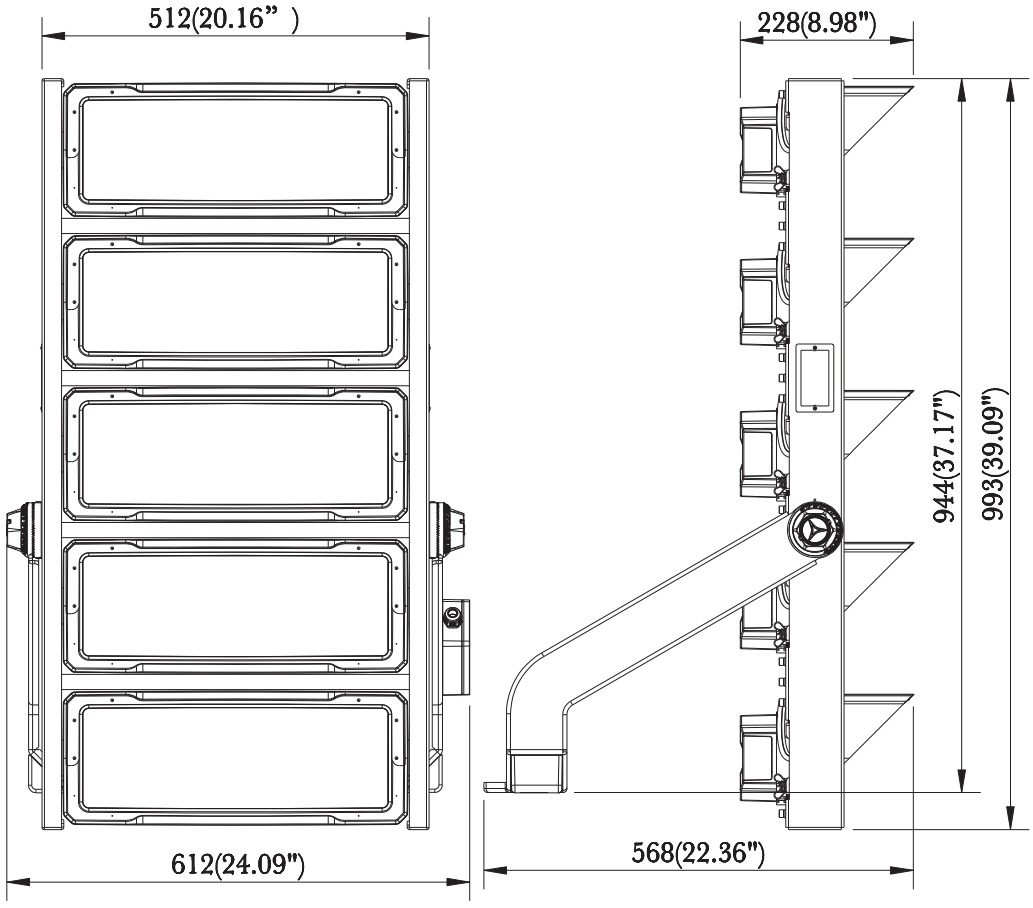

With visor

=42kg/92.59lbs

Mounting bracket mounting

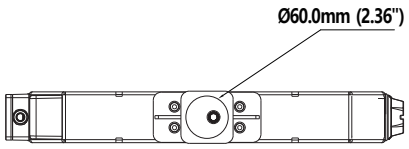

SF bracket mounting

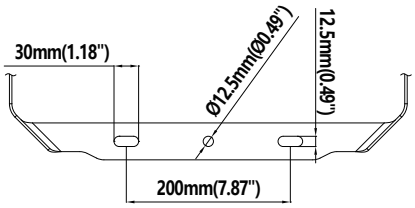

U bracket single module

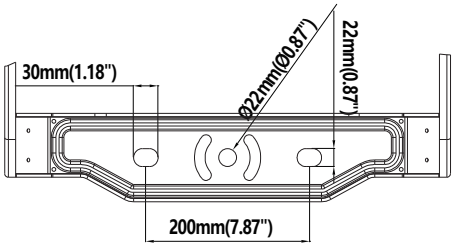

U bracket two/three/four/five modules

3 EPA-Effective Projected Area

The luminaire does not have a hood



Sc

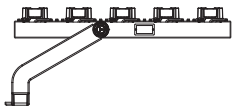

Sc*0°

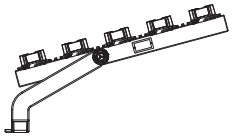

Sc*15°

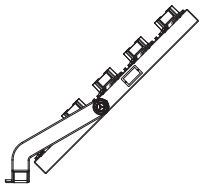

Sc*45°

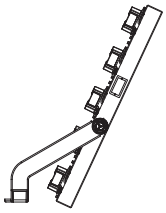

Sc*65°

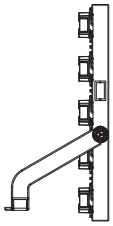

Sc*90°

Single module										
	0°		15°		45°		65°		90°	
Direction	Front	Flank	Front	Flank	Front	Flank	Front	Flank	Front	Flank
Maximum projected area(㎡)	0.05	0.02	0.08	0.02	0.09	0.02	0.09	0.02	0.09	0.02
EPA (ft^2)	0.66	0.32	1.01	0.31	1.14	0.30	1.16	0.30	1.12	0.30

Two module										
	0°		15°		45°		65°		90°	
Direction	Front	Flank	Front	Flank	Front	Flank	Front	Flank	Front	Flank
Maximum projected area(㎡)	0.07	0.07	0.12	0.06	0.19	0.06	0.21	0.06	0.20	0.07
EPA (ft^2)	0.89	0.89	1.58	0.83	2.41	0.78	2.69	0.80	2.62	0.87

Three module										
	0°		15°		45°		65°		90°	
Direction	Front	Flank	Front	Flank	Front	Flank	Front	Flank	Front	Flank
Maximum projected area(㎡)	0.07	0.09	0.15	0.09	0.26	0.08	0.30	0.08	0.30	0.09
EPA (ft^2)	0.89	1.18	1.92	1.12	3.38	1.07	3.84	1.09	3.90	1.17

Four module										
	0°		15°		45°		65°		90°	
Direction	Front	Flank	Front	Flank	Front	Flank	Front	Flank	Front	Flank
Maximum projected area(㎡)	0.07	0.11	0.18	0.15	0.34	0.15	0.39	0.15	0.40	0.15
EPA (ft^2)	0.89	1.47	2.27	1.89	4.35	1.92	4.99	1.90	5.18	1.93

Five module										
	0°		15°		45°		65°		90°	
Direction	Front	Flank	Front	Flank	Front	Flank	Front	Flank	Front	Flank
Maximum projected area(㎡)	0.07	0.11	0.39	0.11	0.41	0.11	0.48	0.11	0.50	0.11
EPA (ft²)	0.92	1.47	5.05	1.42	5.32	1.36	6.22	1.38	6.50	1.46

Luminaire+hood

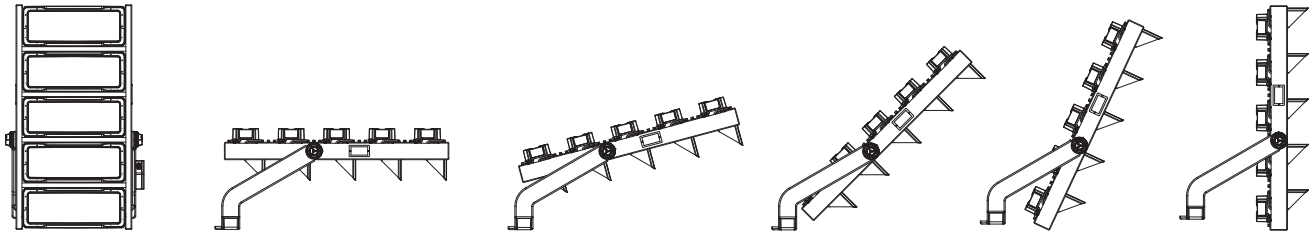

Sc Sc*0° Sc*15° Sc*45° Sc*65° Sc*90°

Single module										
	0°		15°		45°		65°		90°	
Direction	Front	Flank	Front	Flank	Front	Flank	Front	Flank	Front	Flank
Maximum projected area(㎡)	0.09	0.03	0.09	0.03	0.09	0.03	0.09	0.03	0.09	0.03
EPA (ft²)	1.16	0.37	1.17	0.36	1.14	0.36	1.16	0.36	1.12	0.36

Two module										
	0°		15°		45°		65°		90°	
Direction	Front	Flank	Front	Flank	Front	Flank	Front	Flank	Front	Flank
Maximum projected area(㎡)	0.11	0.07	0.14	0.07	0.19	0.07	0.21	0.07	0.20	0.08
EPA (ft²)	1.41	0.97	1.85	0.93	2.41	0.89	2.69	0.91	2.62	0.98

Three module										
	0°		15°		45°		65°		90°	
Direction	Front	Flank	Front	Flank	Front	Flank	Front	Flank	Front	Flank
Maximum projected area(㎡)	0.11	0.10	0.17	0.10	0.26	0.10	0.30	0.10	0.30	0.10
EPA (ft²)	1.41	1.31	2.19	1.27	3.38	1.23	3.84	1.26	3.90	1.33

Four module										
	0°		15°		45°		65°		90°	
Direction	Front	Flank	Front	Flank	Front	Flank	Front	Flank	Front	Flank
Maximum projected area(㎡)	0.11	0.13	0.20	0.17	0.34	0.09	0.39	0.17	0.40	0.17
EPA (ft²)	1.41	1.66	2.54	2.15	4.35	1.22	4.99	2.17	5.18	2.21

Five module										
	0°		15°		45°		65°		90°	
Direction	Front	Flank	Front	Flank	Front	Flank	Front	Flank	Front	Flank
Maximum projected area(㎡)	0.11	0.13	0.41	0.13	0.41	0.12	0.48	0.12	0.50	0.13
EPA (ft²)	1.44	1.66	5.32	1.62	5.32	1.58	6.22	1.61	6.50	1.68

B - MOUNTING

a. Single module

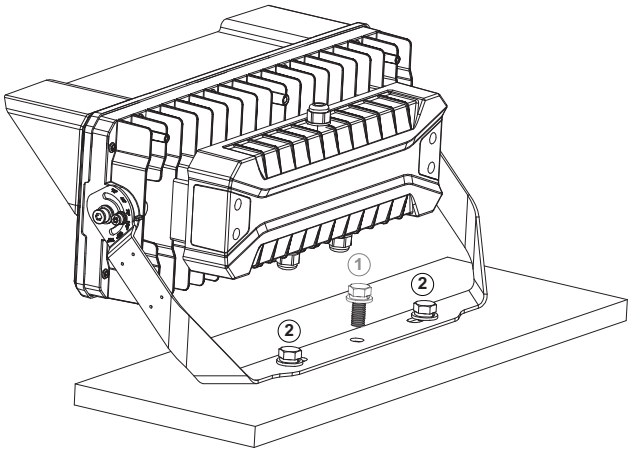

Minimum screw requirement:

Vibration standard	IEC 0.5g/ANSI 3.0g
Minimum fastener requirement	1XM12 8.8 or A2-70 DIN9021 large plain washer
Tightening torques	1XM12 60Nm 2XM12 40Nm

Recommended to use anti-seizing agent(TikalTef-Gel®)!

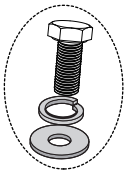

① 1xM12 with extra large washer
or
② 2XM12 with extra large washer

Screws and washers are not included in the package!

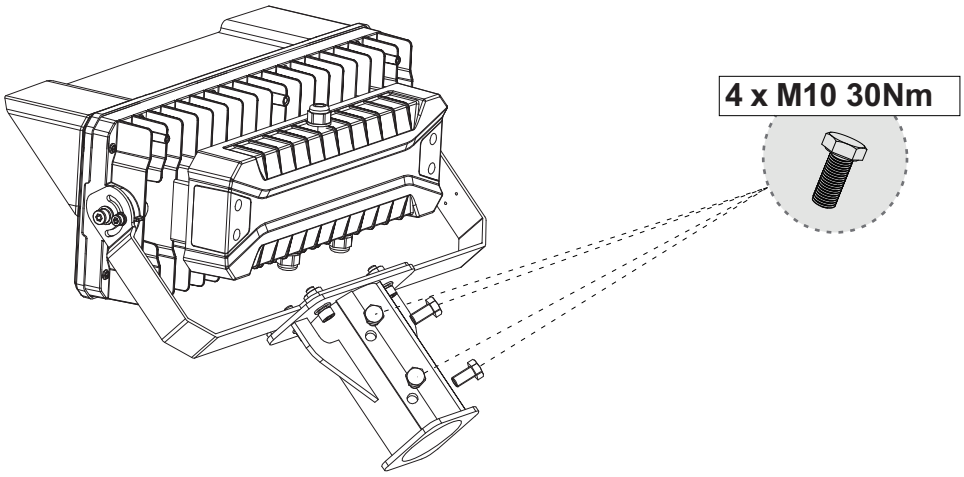

Minimum Surface Contact Area for screw fixation (Direct mounting of support)

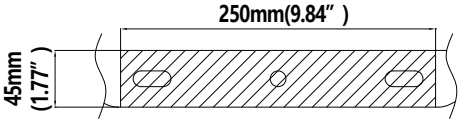

Fasteners are not included in the package!

Remark:the hatched area always need to be supported by a flat planar mounting surface as minimum.

Wider surface contact is recommended,smaller is not allowed!

b. Two/three/four modules

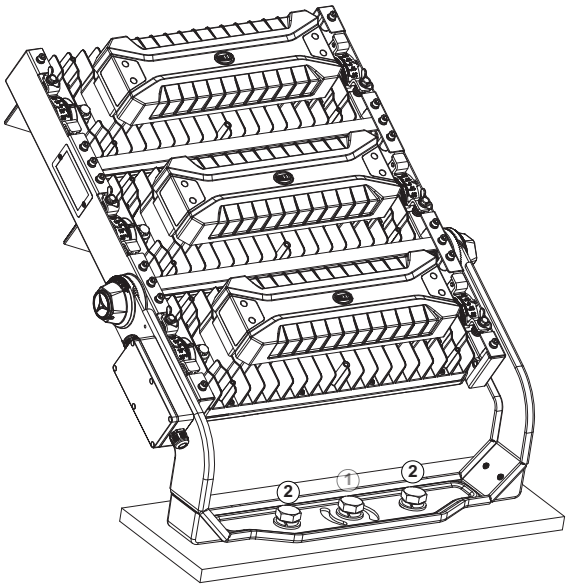

Minimum screw requirement:

Vibration standard	IEC 0.5g/ANSI 3.0g
Minimum fastener requirement	1XM20 8.8 or A2-70 DIN9021 large plain washer
Tightening torques	1XM20 200Nm 2XM20 140Nm

Recommended to use anti-seizing agent(TikalTef-Gel®)!

Screws and washers are not included in the package!

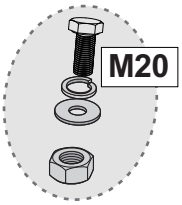

① 1xM20 with extra large washer
or
② 2XM20 with extra large washer

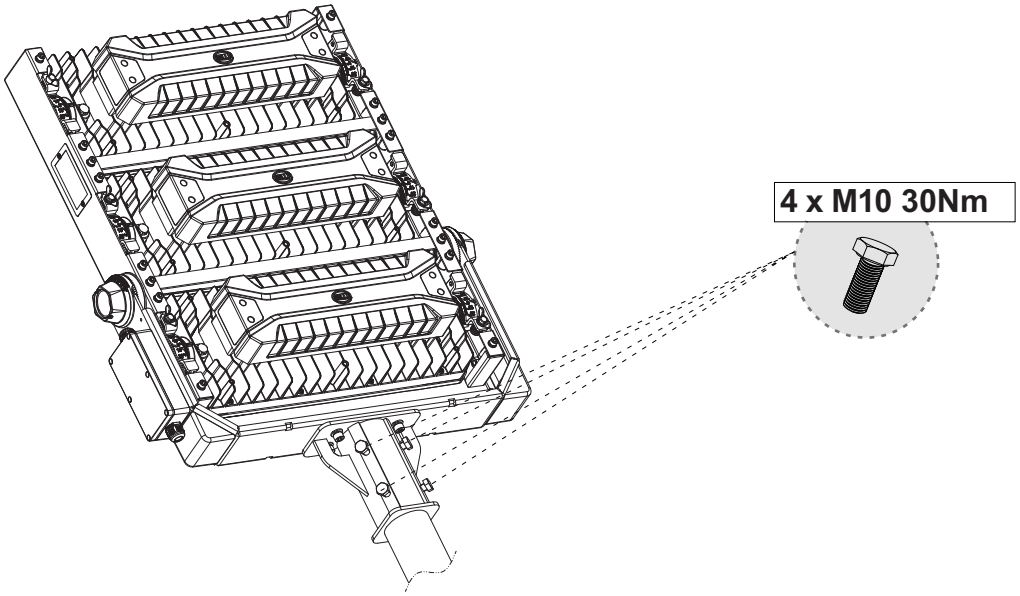

Minimum Surface Contact Area for screw fixation (Direct mounting of support)

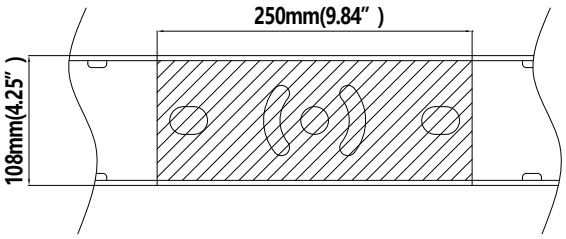

Fasteners are not included in the package!

Remark:the hatched area always need to be supported by a flat planar mounting surface as minimum.

Wider surface contact is recommended,smaller is not allowed!

C - ANGLE ADJUSTMENT

a. Direct mounting of support

Loosen M6 Hexagon socket screw and M8 Hexagon socket screw with wrench, adjust luminaire to designed angle, tighten screws and fix the luminaire (M8 screw Torque Values 110 N.m).

The Angle mark is silk-printed on the bracket to facilitate the Angle adjustment during the installation of the lamp.

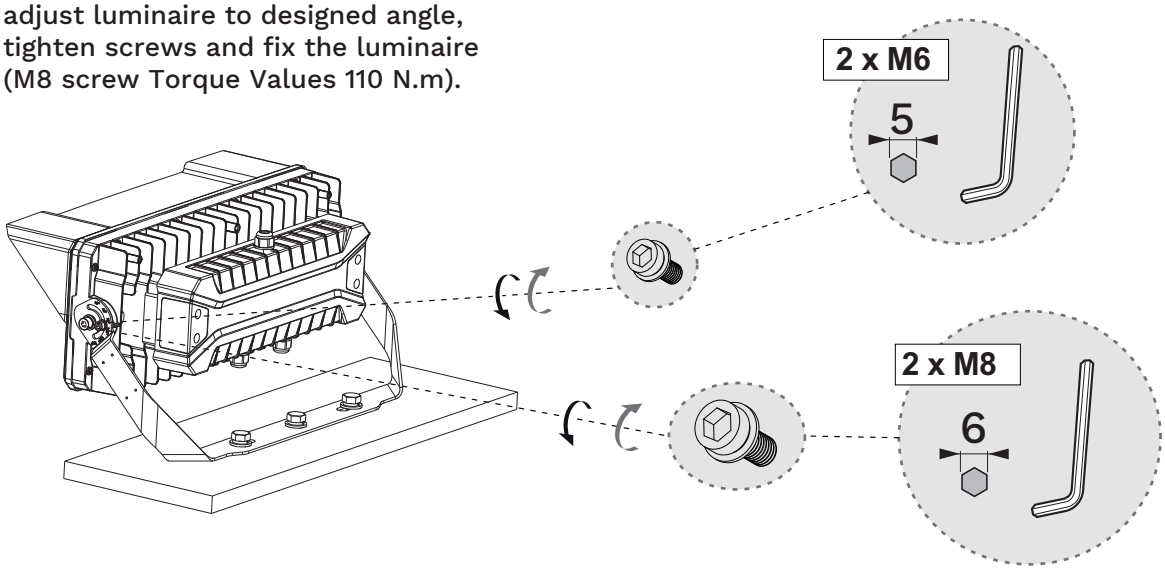

Each module has its own scale, allowing for Angle adjustment.

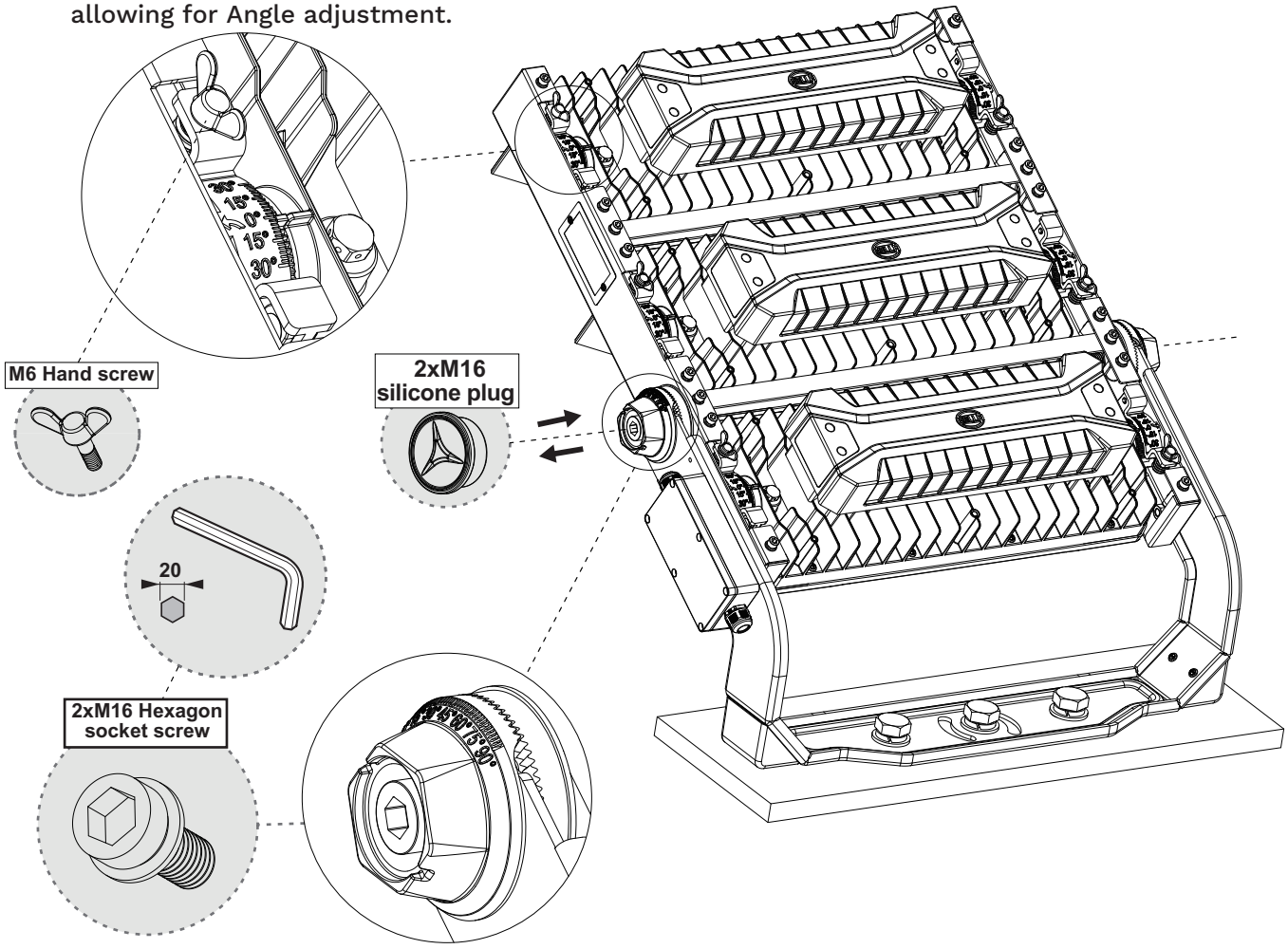

D - ALLOWED POSITIONING

Formal mounting and hoisting mounting

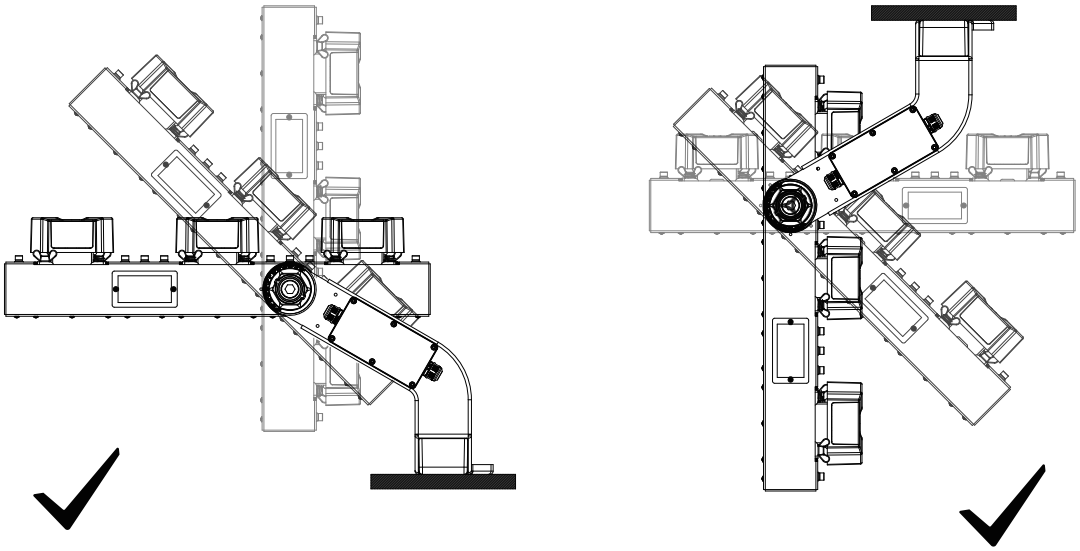

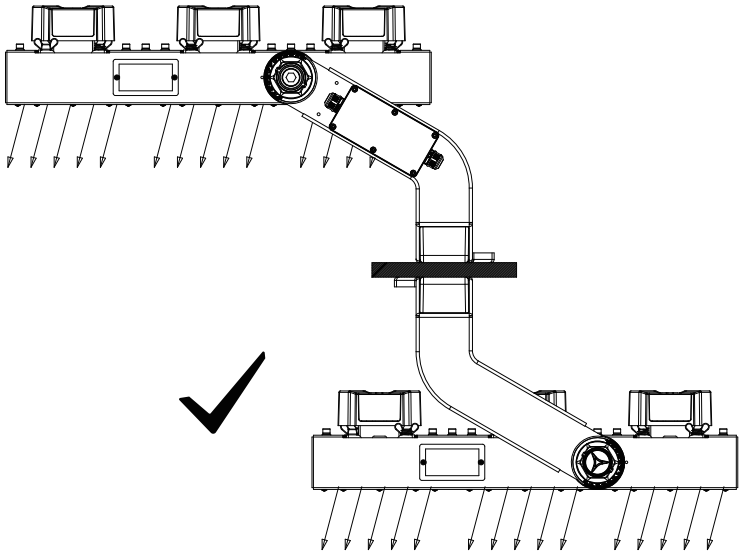

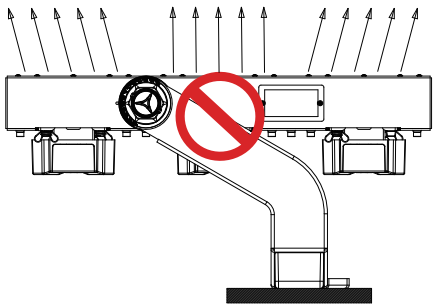

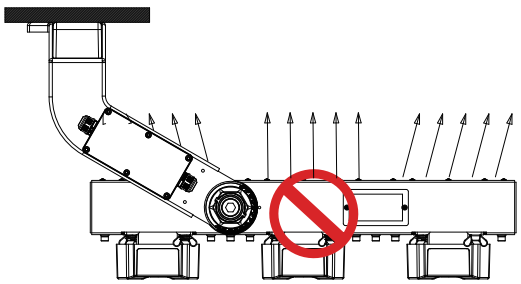

When used outdoors, it is strictly prohibited to install the luminous surface vertically upward.

E - SAFETY CABLE

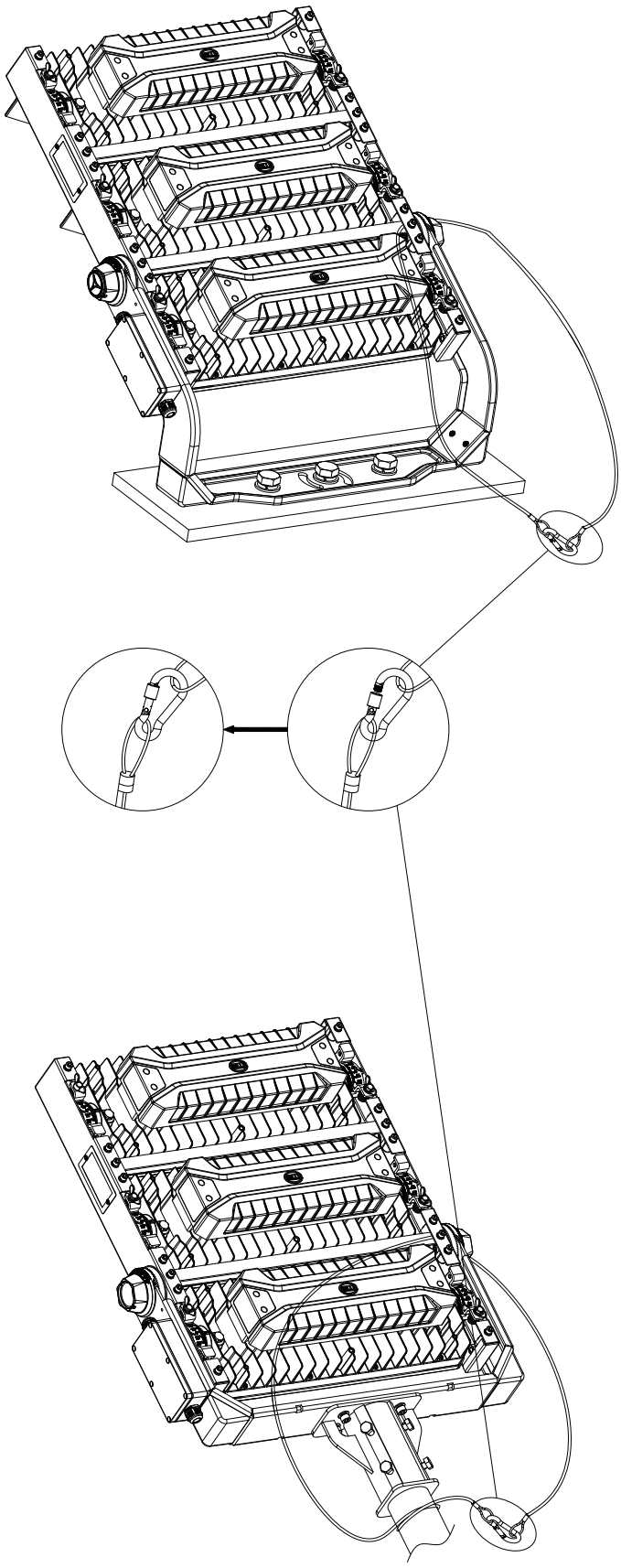

⚠ NOTICE ⚠

1. No sharp edges on the interface (bracket or hole) of mounting side.
2 The safety chain must be replaced immediately if any of the below scenarios occur:
   a. The safety chain was stretched at any time due to luminaire falling;
   b. Part of steel wire is broken or frayed;
   c. The safety chain is designed to protect the luminaire from falling, but the luminaire should not be suspended for a long time.

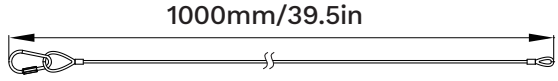

⚠ 1000mm/39.5in safety cable is supplied with the luminaire.

Steel safety cable should pass through the holes shown in the drawing in sequence. Then connect the two ends with the lock buckle and tighten the lock bolt by hand.

For installations over 3m height: secondaryA safety system application is mandatory, which is appropriated for the luminaire load (e.g. safety cable)

F - ELECTRICAL CONNECTION

U bracket single module

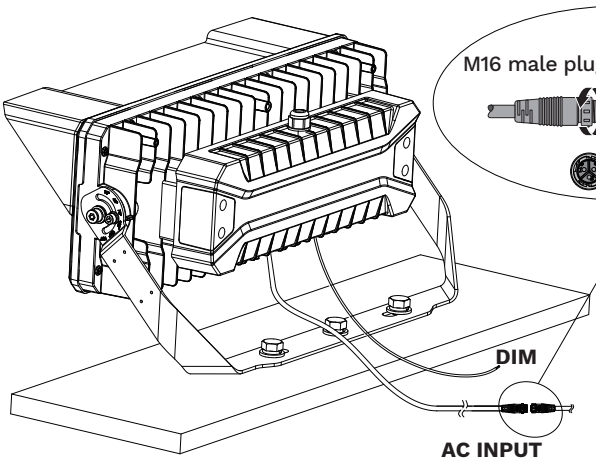

SF bracket single module

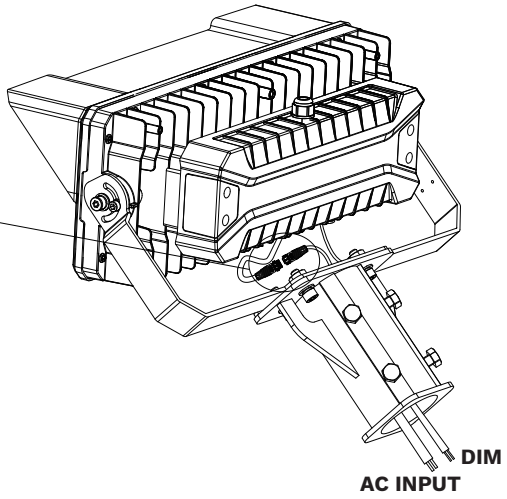

U bracket two/three/four/five modules

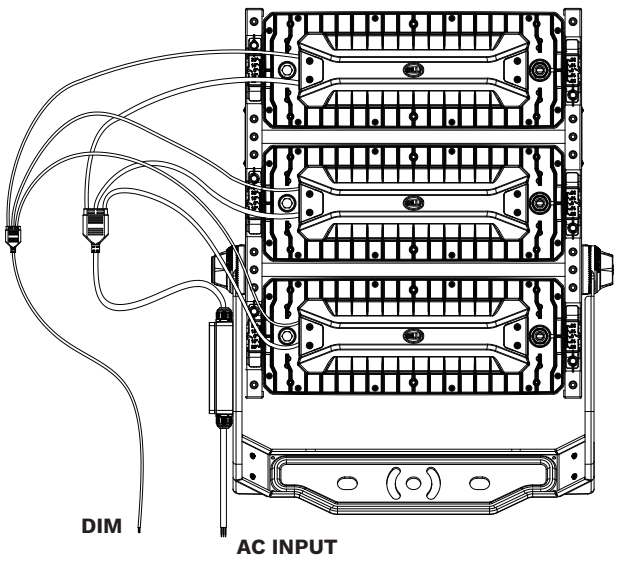

SF bracket two/three modules

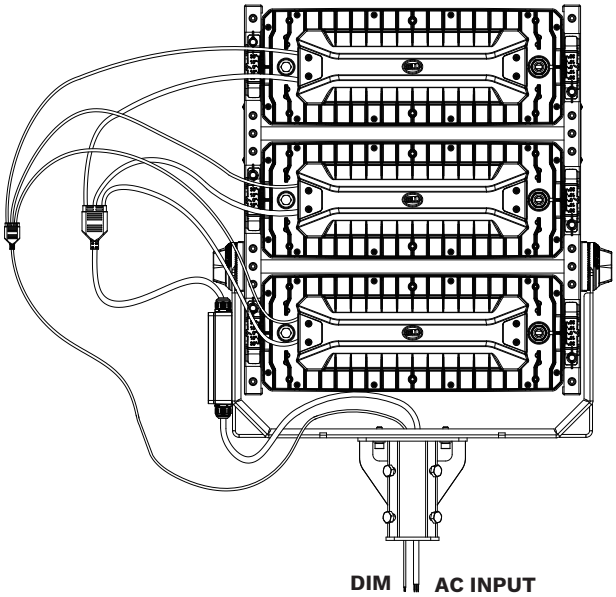

Wiring Diagram

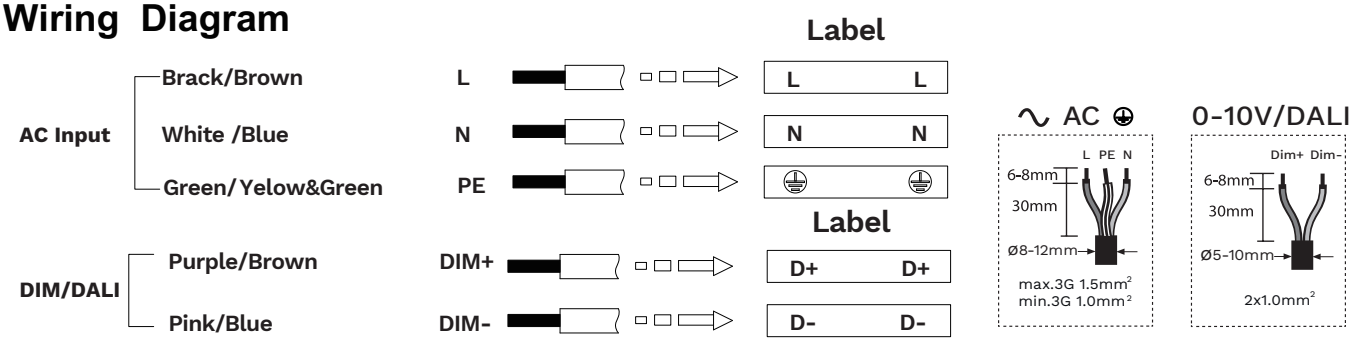

When using a larger external diameter cable,the plug and the smaller inner diameter seal need to be removed. When using a smaller external diametercable, simply remove the plug.

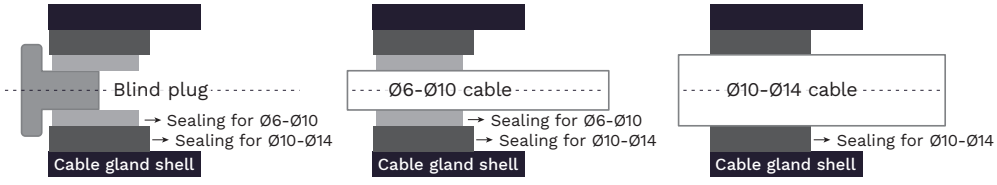

G - RECOMMENDATIONS

Surrounding distances

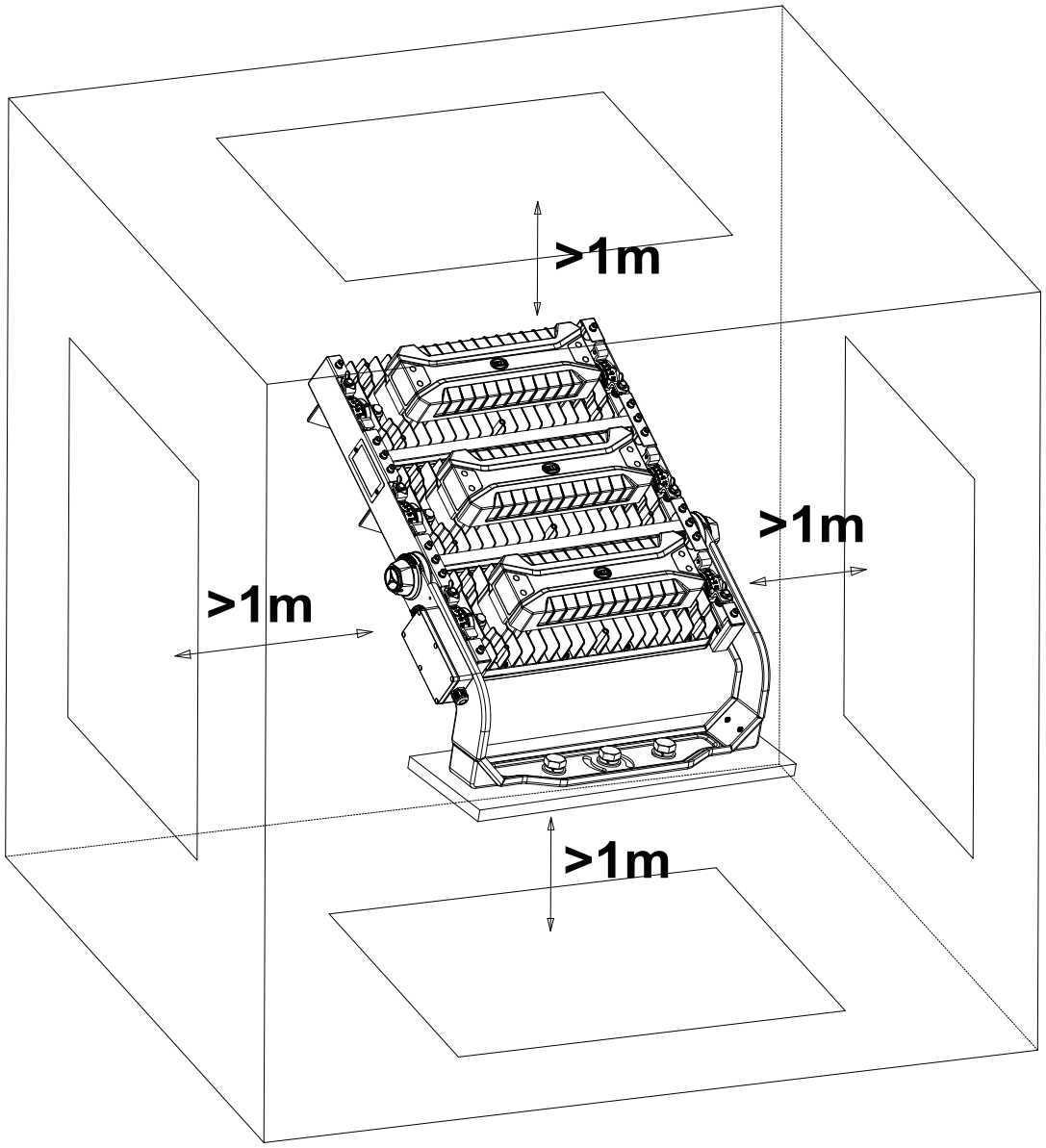

At least 1 meter distance should be kept from surrounding walls, floor, and ceiling for all types of mounting/inclination.

H - AIMING DEVICE

Laser sight

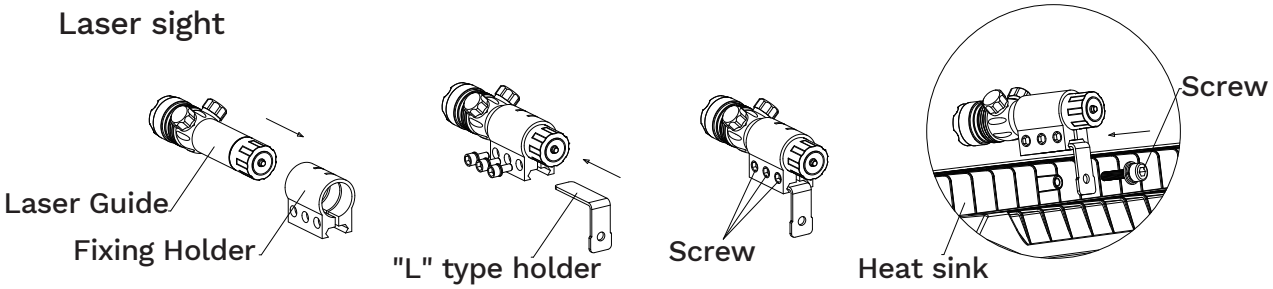

I - ACCESSORIES - HOOD

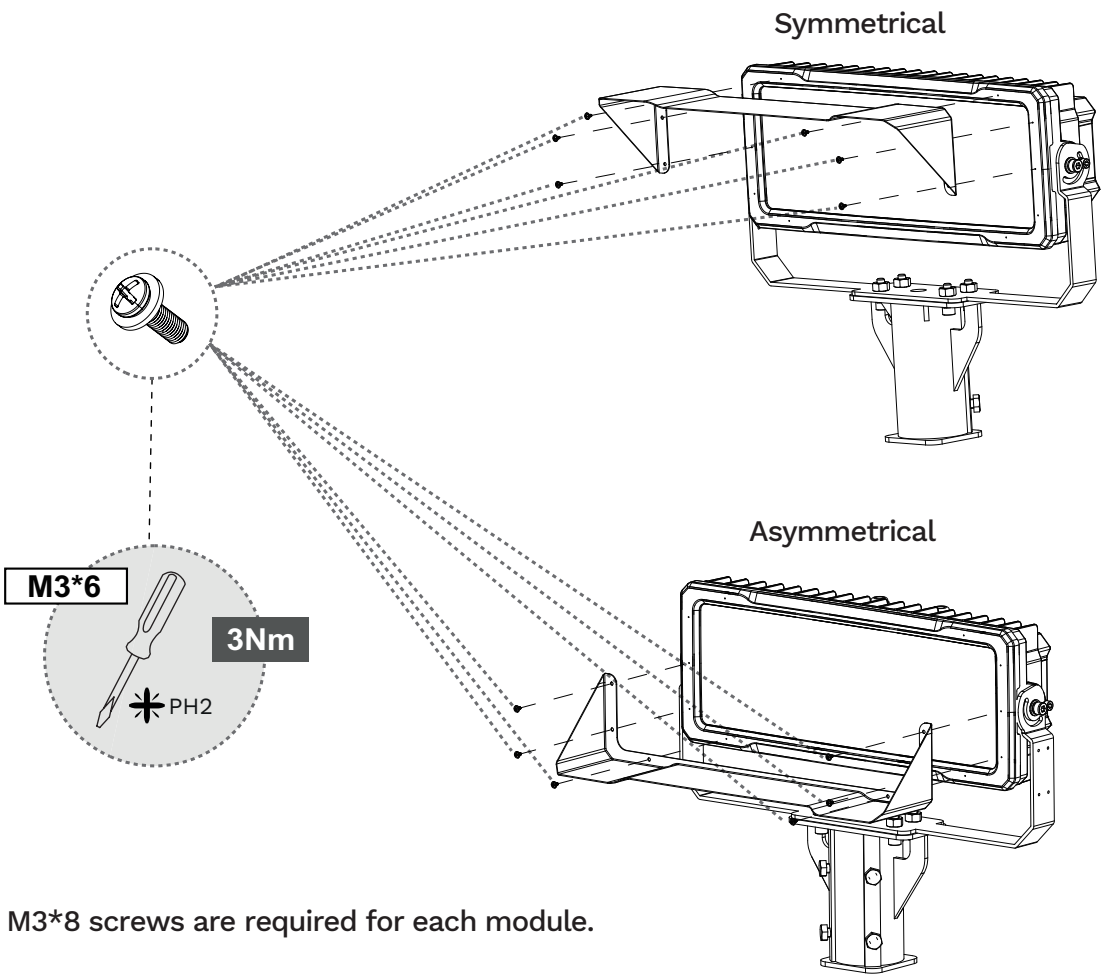

6pcs M3*8 screws are required for each module.

Hood can be ordered separately as an accessory.

J - PACKING LIST

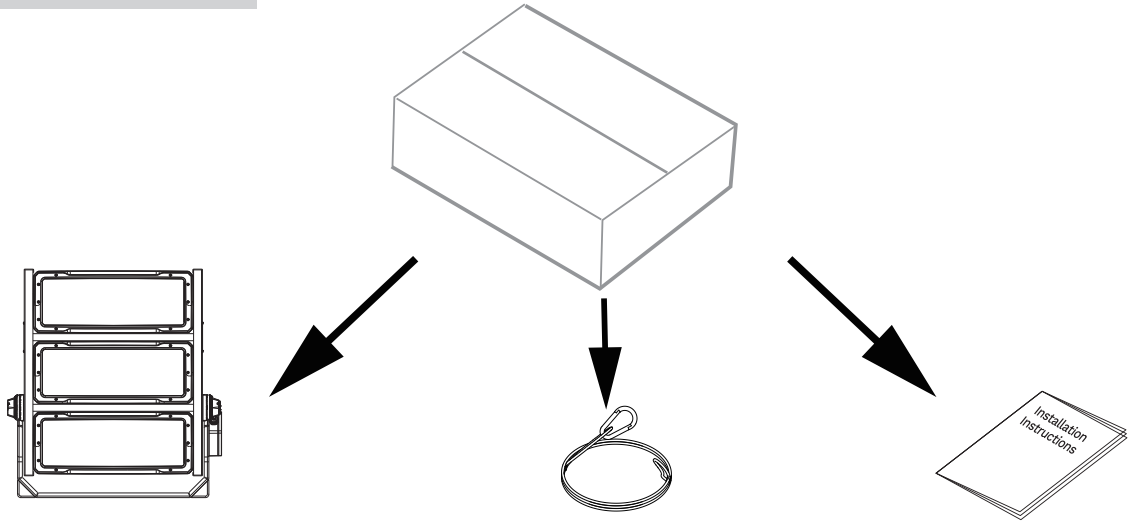

1x **1x** **1x**

NOTICE: Only 2 modules and more are equipped with safety cables.

Warning

1. The luminaire shall be installed by a qualified electrician and wired in accordance with the latest lEEE electrical regulations or the national requirements.
2. Switch off main power supply before Installation, maintenance and any operation.
3. The light source contained in this luminaire shall only be replaced by the manufacturer or his service agent or a similar qualified persor.
4. This luminaire is Y attachment. if the external flexible cable or cord of this luminaire is damaged, it shall be exclusively replaced by the manufacturer or his service agent or a similar qualified person in order to avoid a hazard.
5. Use IP66 grade connection devices with cable clamp to ensure a complete IP66 system.
6. Refer to technical datasheet for additional electrical properties to ensure installation safely.
7. Ensure power supply cables (L-N / L-N-E) are connected correctly before switching on.
8. The insulation between LV and control circuit is basic insulation.
9. This product is not suitable for corrosive environment, such as areas less than I km from the coast, port crane, sea-crossing bridge, island.
10. The luminaire should be positioned so that prolonged staring into the luminaire at a distance closer than 21 m is not expected.
11. Earthing contact to customer end on luminaire must be connected by installer, including whole use process that the earthing contact is always reliably linked to earth ground.
12. The luminaire should avoid storage and usage in such a surroundings or an occasion that is with corrosion or hazardous gases like sulfide, halide,phthalate and so on.
13. The PC material cannot be used in such an ambience that is with ethylamine, tetra-dichloroethylene, which is corrosion or hazardous to PC material and so on.
14. All materials used in luminaire must be compliance to RoHS as below table.
15. The Luminaire should never be used in submerged wet conditions e.g, under water, soil, snow etc.
16. The wiring connection should also never be used in submerged wet conditions e.g. water, soil, snow etc. OR must use IP68 junction box.
17. The warranty is void, in case any of the instructions / guidelines are not followed as per given mounting instruction.
18. This product is not supplied with any junction box / connector.
19. This product contains a light source of energy efficiency class: see table or label.
20. For further clarification, please contact the manufacturer.

Maintenance

1. Periodic clearing of the luminaires' optical lens covers will ensure maximum optical efficiency.
2. Luminaire optical lens cover shall be cleaned with clean water, non-abrasive soap, cleaner and detergent solution. Acid solution or alkali solution cannot be used as a cleaning solution to wash outside surface of luminaire.

Caution

1. Luminaire must be used within the applicable product specification of installation instruction and environmental conditions for storage and operation according to application guidelines provided for valid product warranty.
2. The information presented in this document does not form part of any quotation or contract, is believed to be accurate and reliable and may be changed without notice.