IBERLAMP

SPECIFICATION

Product model	T-005009-48W	
Product Size (mm)	420*3400mm	
Product description	**Body material**	Die Casting Aluminum
	Optical cover material	PC
	Surface finish	Pure polyester powder coating
	Safety	CLASS I
	Protection Grade	IP66
	Impact Strength(IK)	IK08
	UV-Resistant	F1
	Rated Power	48 W
	LED Module Rated Power	0.8W*60
	Input Voltage	120-240V ~
	Frequency Range	50/60 Hz
	Luminaire luminous efficiency(EFF)	109 lm/W
	Imax(cd)	1403 cd
	Luminaire Efficiency(LOR%)	93
	Total Flux	5800 lm
	Beam angle(At 50% of Imax)	140°
	Energy Efficiency Index(EEI)	0.14
	Colour rendering index(Ra)	≥80
	Colour Temperature(CCT)	3000K
	SDCM	≤5
	Surge transient protection	L/N:4KV
	Working temperature	-30℃ ~ +45℃
LED Chip	**LED Brand**	OSRAM
	LED Model No.	3030
	LED Nominal Flux(lm)	96 lm
	LED Quantity	60 PCS
	Life Span	50000 Hrs
Driver	**STOCK NUMBER**	L-QD-AL008
	Driver Brand	TUV approval
	Driver Output	40-80VDC
	Driver Effeciency	≥88%
	Power Factor	≥0.95
	THD	≤10%
	Ripple current	≤10%
Certification	**CE、CCC、CB、SAA、BIS**	





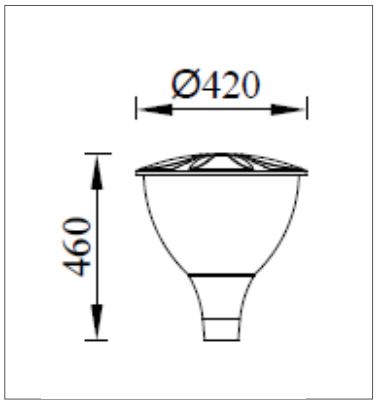

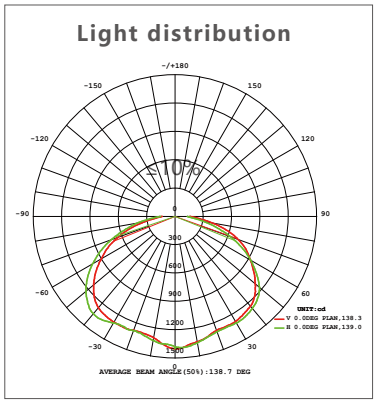

C/Artesans,4-Pol. Ind. Bovalar - 46970 Alaquas - Valencia - Spain
+34 644 775 554 / +34 667 788 071 / +34 667 788 072
info@iberlamp.com www.iberlamp.com CIF B-02797751