IBERLAMP

SPECIFICATION





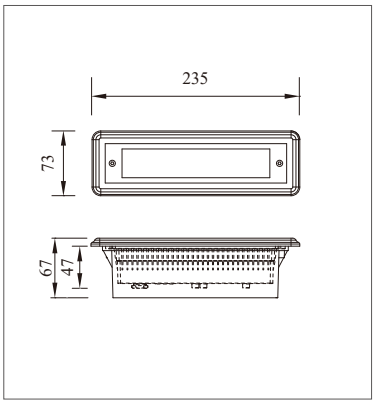

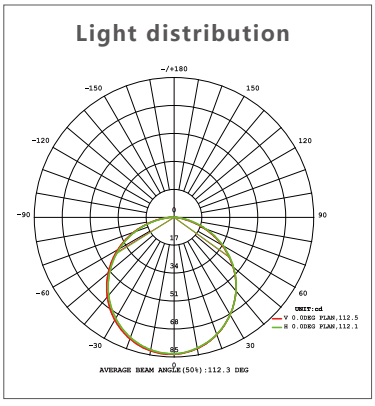

Product model	Q-003861+B	
Product Size (mm)	235*73*67	
Product description	**Body material**	Die Casting Aluminum
	Optical cover material	PC
	Surface finish	Polyester powder coating
	Safety	CLASS I
	Protection Grade	IP65
	Impact Strength(IK)	IK08
	UV-Resistant	F1
	Life Span	50000 Hrs
	Rated Power	5 W
	LED Module Rated Power	0.5W*10
	Input Voltage	220-240V ~
	Frequency Range	50/60Hz
	Luminaire luminous efficiency(EFF)	41 lm/W
	Imax(cd)	83 cd
	Luminaire Efficiency(LOR%)	39
	Total Flux	230 lm
	Beam angle(At 50% of Imax)	112°
	Energy Efficiency Index(EEI)	0.46
	Colour rendering index(Ra)	≥80
	Colour Temperature(CCT)	3000 K
	SCDM	≤5
	Surge transient protection	L/N:2KV
	Working temperature	-30℃ ~ +45℃
LED Chip	**LED Brand**	OSRAM
	LED Model No.	2835
	LED Nominal Flux(lm)	70 lm
	LED Quantity	10 PCS
Driver	**STOCK NUMBER**	L-QD-PA253
	Driver Brand	TUV approval
	Driver Output	27-42VDC
	Driver Effeciency	≥81%
	Power Factor	≥0.65
	THD	≤40%
	Ripple current	≤30%
Certification	**CE、CCC、CB、SAA、BIS**	

C/Artesans,4-Pol. Ind. Bovalar - 46970 Alaquas - Valencia - Spain
+34 644 775 554 / +34 667 788 071 / +34 667 788 072
info@iberlamp.com www.iberlamp.com CIF B-02797751